# HITACHI

LIST NO. F833

# ELECTRIC TOOL PARTS LIST

## ■ CORDLESS IMPACT WRENCH 1999·3·30

## Model WR 8DH (E1)

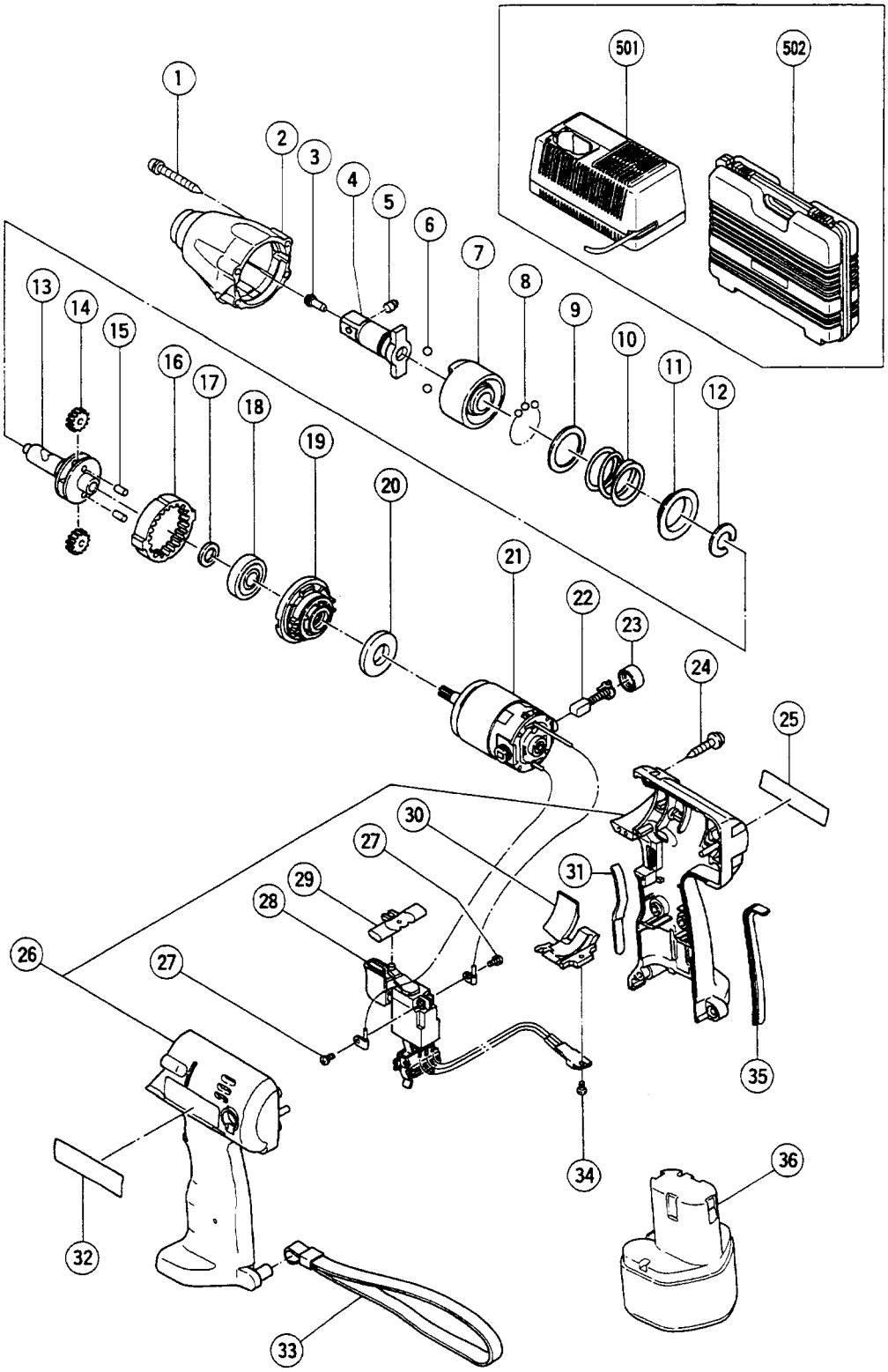

| | ITEM NO. | CODE NO. | DESCRIPTION | NO. USED | REMARKS | |
|---|---|---|---|---|---|---|
| | 1 | 307-851 | TAPPING SCREW (W/SP. WASHER) D4X30(BLACK) | 4 | | |
| | 2 | 317-343 | HAMMER CASE | 1 | | |
| * | 3 | 985-209 | PIN RETAINER | 1 | | |
| * | 4 | 317-342 | ANVIL (K) ASS'Y | 1 | INCLUD.3,5 | |
| * | 4 | 316-181 | ANVIL (J) | 1 | FOR TPE,SIN | |
| * | 5 | 985-208 | PLUNGER | 1 | | |
| | 6 | 959-154 | STEEL BALL D5.556 (10 PCS.) | 2 | | |
| | 7 | 316-780 | HAMMER | 1 | | |
| | 8 | 315-980 | STEEL BALL D3.5 | 25 | | |
| | 9 | 315-978 | WASHER (J) | 1 | | |
| | 10 | 316-781 | SPRING | 1 | | |
| | 11 | 316-172 | WASHER (S) | 1 | | |
| | 12 | 316-171 | STOPPER | 1 | | |
| | 13 | 316-169 | SPINDLE | 1 | | |
| | 14 | 316-313 | IDLE GEAR | 2 | | |
| | 15 | 991-449 | NEEDLE ROLLER | 2 | | |
| | 16 | 302-337 | RING GEAR | 1 | | |
| | 17 | 991-455 | WASHER (C) | 1 | | |
| | 18 | 600-1VV | BALL BEARING 6001VVCMPS2L | 1 | | |
| | 19 | 316-167 | INNER COVER | 1 | | |
| | 20 | 310-319 | DAMPER | 1 | | |
| | 21 | 316-782 | MOTOR | 1 | | |
| | 22 | 999-054 | CARBON BRUSH 5X6X11.5 (1 PAIR) | 2 | | |
| | 23 | 316-180 | BRUSH CAP | 2 | | |
| | 24 | 302-086 | TAPPING SCREW (W/FLANGE) D4X20 (BLACK) | 7 | | |
| | 25 | | NAME PLATE | 1 | | |
| | 26 | 317-879 | HOUSING (A).(B) SET (GREEN) | 1 | INCLUD.31,35 | |
| | 27 | 994-532 | MACHINE SCREW (W/SP. WASHER) M3X5 | 2 | | |
| | 28 | 316-783 | DC-SPEED CONTROL SWITCH | 1 | | |
| | 29 | 316-166 | PUSHING BUTTON | 1 | | |
| | 30 | 316-179 | FIN ASS'Y | 1 | INCLUD.34 | |
| | 31 | 316-178 | GRIP (F) | 1 | | |
| | 32 | | HITACHI LABEL | 1 | | |
| | 33 | 306-952 | STRAP | 1 | | |
| | 34 | 311-131 | S-TIGHT SCREW D3.5X6 | 1 | | |
| | 35 | 316-177 | GRIP (R) | 1 | | |
| * | 36 | 310-377 | BATTERY EB 9B (W/ENGLISH N.P.) | 1 | | |
| * | 36 | 310-450 | BATTERY EB 9B (W/ENGLISH N.P.) | 1 | FOR TPE,NZL,AUS,SIN | |
| * | 36 | 310-451 | BATTERY EB 9B (W/ENGLISH N.P.) | 1 | FOR USA | |
| * | 36 | 316-662 | BATTERY EB 9H (W/ENGLISH N.P.) | 1 | | |

★ : ALTERNATIVE PARTS

## STANDARD ACCESSORIES



| ITEM NO. | CODE NO. | DESCRIPTION | NO. USED | REMARKS | |
|---|---|---|---|---|---|
| 501 | | CHARGER (MODEL UC 14YF2) | 1 | DEPENDING ON ORDER SPEC. | |
| 502 | 306-306 | CASE | 1 | | |

## OPTIONAL ACCESSORIES

| ITEM NO. | CODE NO. | DESCRIPTION | NO. USED | REMARKS | |
|---|---|---|---|---|---|
| * 601 | 316-662 | BATTERY EB 9H (W/ENGLISH N.P.) | 1 | EXCEPT TPE,NZL,AUS,SIN,USA | |
| 602 | | CORNER ATTACHMENT (MODEL EW-14R) | 1 | INCLUD.603-618 | |
| 603 | 955-300 | HOUSING | 1 | | |
| 604 | 955-301 | METAL | 3 | | |
| 605 | 955-302 | SPINDLE | 1 | | |
| 606 | 955-303 | BEARING RACE | 2 | | |
| 607 | 955-304 | NEEDLE THRUST BEARING (NTA-1413) | 2 | | |
| 608 | 955-305 | COVER | 1 | | |
| 609 | 955-306 | NEEDLE BEARING (NTN BK1012) | 1 | | |
| 610 | 948-227 | RETAINING RING FOR D47 HOLE | 1 | | |
| 611 | 955-307 | PINION | 1 | | |
| 612 | 955-308 | SLEEVE | 1 | | |
| 613 | 955-309 | WASHER | 1 | | |
| 614 | 955-310 | SOCKET COVER | 1 | | |
| 615 | 955-311 | SOCKET | 1 | | |
| 616 | 303-247 | SEAL LOCK HEX. SOCKET HD. BOLT M5X25 | 6 | | |
| 617 | 873-537 | SOCKET PIN | 1 | | |
| 618 | 873-187 | O-RING (J1SW1516) | 1 | | |
| 619 | 991-481 | FORM TIE SOCKET ASS'Y 11.3MMX95L | 1 | INCLUD.617,618 | |
| 620 | 944-291 | HEX. SOCKET ASS'Y 10MMX40L | 1 | INCLUD.617,618 | |
| 621 | 873-632 | HEX. SOCKET ASS'Y 12MMX40L | 1 | INCLUD.617,618 | |
| 622 | 873-539 | HEX. SOCKET ASS'Y 13MMX40L | 1 | INCLUD.617,618 | |
| 623 | 873-540 | HEX. SOCKET ASS'Y 14MMX40L | 1 | INCLUD.617,618 | |
| 624 | 873-536 | HEX. SOCKET ASS'Y 17MMX32L | 1 | INCLUD.617,618 | |
| 625 | 873-624 | HEX. SOCKET ASS'Y 19MMX34L | 1 | INCLUD.617,618 | |
| 626 | 873-626 | HEX. SOCKET ASS'Y 21MMX36L | 1 | INCLUD.617,618 | |
| 627 | 873-627 | HEX. SOCKET ASS'Y 22MMX40L | 1 | INCLUD.617,618 | |



* : ALTERNATIVE PARTS

## OPTIONAL ACCESSORIES



| ITEM NO. | CODE NO. | DESCRIPTION | NO. USED | REMARKS | |
|---|---|---|---|---|---|
| 628 | 986-058 | HEX. SOCKET FOR PLASTIC CONE 12MMX70L | 1 | INCLUD.617,618 | |
| 629 | 955-138 | HEX. SOCKET ASS'Y (LONG) 12MMX52L | 1 | INCLUD.617,618 | |
| 630 | 955-139 | HEX. SOCKET ASS'Y (LONG) 13MMX52L | 1 | INCLUD.617,618 | |
| 631 | 955-140 | HEX. SOCKET ASS'Y (LONG) 14MMX52L | 1 | INCLUD.617,618 | |
| 632 | 955-141 | HEX. SOCKET ASS'Y (LONG) 17MMX52L | 1 | INCLUD.617,618 | |
| 633 | 955-149 | HEX. SOCKET ASS'Y (LONG) 17MMX75L | 1 | INCLUD.617,618 | |
| 634 | 955-142 | HEX. SOCKET ASS'Y (LONG) 19MMX52L | 1 | INCLUD.617,618 | |
| 635 | 955-150 | HEX. SOCKET ASS'Y (LONG) 19MMX75L | 1 | INCLUD.617,618 | |
| 636 | 955-143 | HEX. SOCKET ASS'Y (LONG) 21MMX52L | 1 | INCLUD.617,618 | |
| 637 | 955-151 | HEX. SOCKET ASS'Y (LONG) 21MMX75L | 1 | INCLUD.617,618 | |
| 638 | 991-480 | HEX. SOCKET ASS'Y (LONG) 21MMX125L | 1 | INCLUD.617,618 | |
| 639 | 955-144 | HEX. SOCKET ASS'Y (LONG) 22MMX52L | 1 | INCLUD.617,618 | |
| 640 | 873-633 | EXTENSION BAR ASS'Y (SQUARE) 12.7MMX100L | 1 | INCLUD.617,618 | |
| 641 | 992-610 | UNIVERSAL JOINT ASS'Y | 1 | INCLUD.617,618,642 | |
| 642 | 955-153 | UNIVERSAL JOINT PIN | 1 | | |
| 643 | 993-658 | SOCKET ASS'Y FOR DUCT 12MMX95L | 1 | INCLUD.617,618,644 | |
| 644 | 993-659 | SOCKET FOR DUCT 12MMX52L | 1 | | |
| 645 | 992-613 | SOCKET ASS'Y FOR DUCT 13MMX95L | 1 | INCLUD.617,618,646 | |
| 646 | 992-614 | SOCKET FOR DUCT 13MMX52L | 1 | | |
| 647 | 992-615 | SOCKET ASS'Y FOR DUCT 14MMX95L | 1 | INCLUD.617,618,648 | |
| 648 | 992-616 | SOCKET FOR DUCT 14MMX52L | 1 | | |
| 649 | 991-476 | BIT ADAPTER ASS'Y | 1 | INCLUD.617,618 | |
| 650 | 307-824 | HOLSTER | 1 | | |
| 651 | 308-090 | HOOK (FOR CORDLESS TOOLS) | 1 | | |
| 652 | 309-922 | GREASE FOR IMPACT DRIVER (500G) | 1 | | |

★ : ALTERNATIVE PARTS



Printed in Japan 3 – 99
(990330 N)