HITACHI

LIST NO. F830

ELECTRIC TOOL PARTS LIST

■ CORDLESS IMPACT WRENCH

1998·11·30

Model WR 12DH

(E1)

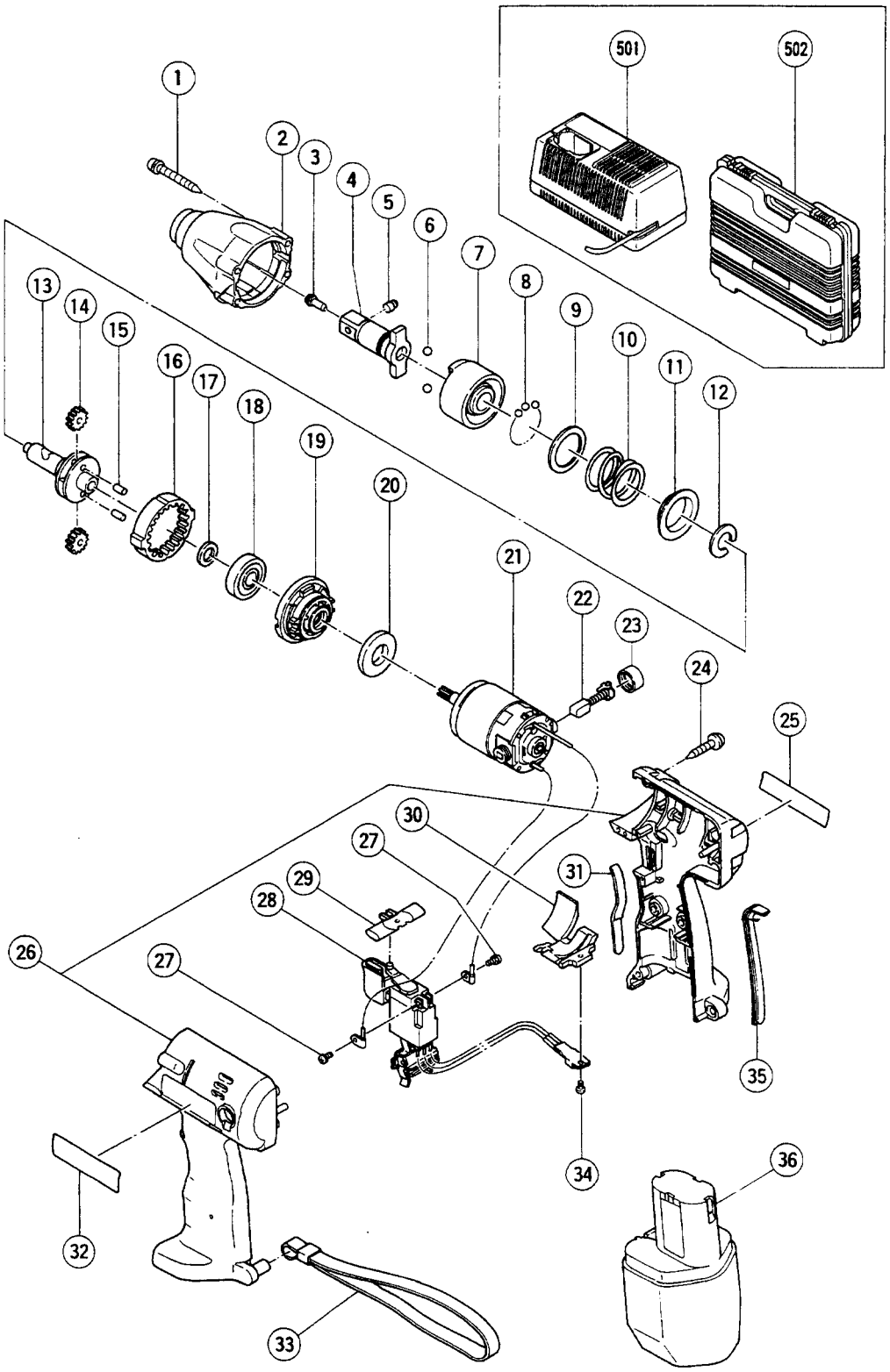

ITEM NO.	CODE NO.	DESCRIPTION	NO. USED	REMARKS	
1	307-851	TAPPING SCREW (W/SP. WASHER) D4X30(BLACK	4		
2	317-343	HAMMER CASE	1		
3	985-209	PIN RETAINER	1		
4	317-342	ANVIL (K) ASS'Y	1	INCLUD.3,5	
5	985-208	PLUNGER	1		
6	959-154	STEEL BALL D5.556 (10 PCS.)	2		
7	316-168	HAMMER	1		
8	315-980	STEEL BALL D3.5	25		
9	315-978	WASHER (J)	1		
10	316-170	SPRING	1		
11	316-172	WASHER (S)	1		
12	316-171	STOPPER	1		
13	316-169	SPINDLE	1		
14	316-313	IDLE GEAR	2		
15	991-449	NEEDLE ROLLER	2		
16	302-337	RING GEAR	1		
17	991-455	WASHER (C)	1		
18	600-1VV	BALL BEARING 6001VVCMPS2L	1		
19	316-167	INNER COVER	1		
20	310-319	DAMPER	1		
21	316-173	MOTOR	1		
22	999-054	CARBON BRUSH 5X6X11.5 (1 PAIR)	2		
23	316-180	BRUSH CAP	2		
24	302-086	TAPPING SCREW (W/FLANGE) D4X20 (BLACK)	7		
25		NAME PLATE	1		
26	317-340	HOUSING (A).(B) SET	1	INCLUD.31,35	
27	994-532	MACHINE SCREW (W/SP. WASHER) M3X5	2		
28	316-783	DC-SPEED CONTROL SWITCH	1		
29	316-166	PUSHING BUTTON	1		
30	316-179	FIN ASS'Y	1	INCLUD.34	
31	316-178	GRIP (F)	1		
32		HITACHI LABEL	1		
33	306-952	STRAP	1		
34	311-131	S-TIGHT SCREW D3.5X6	1		
35	316-177	GRIP (R)	1		
* 36	310-378	BATTERY EB 12B (W/ENGLISH N.P.)	1		
* 36	310-452	BATTERY EB 12B (W/ENGLISH N.P.)	1	FOR NZL,AUS	
* 36	310-453	BATTERY EB 12B (W/ENGLISH N.P.)	1	FOR USA,CAN	
* 36	316-665	BATTERY EB 12H (W/ENGLISH N.P.)	1		

★ : ALTERNATIVE PARTS

STANDARD ACCESSORIES

	ITEM NO.	CODE NO.	DESCRIPTION	NO. USED	REMARKS	
*	501		CHARGER (MODEL UC 14YF)	1	DEPENDING ON ORDER SPEC.	
*	501		CHARGER (MODEL UC 14YF2)	1	DEPENDING ON ORDER SPEC.	
	502	306-306	CASE	1		

OPTIONAL ACCESSORIES

ITEM NO.	CODE NO.	DESCRIPTION	NO. USED	REMARKS	
601		CORNER ATTACHMENT ASS'Y	1	INCLUD.602-618	
602	955-300	HOUSING	1		
603	955-301	METAL	3		
604	955-302	SPINDLE	1		
605		HITACHI LABEL	1		
606	955-303	BEARING RACE	2		
607	955-304	NEEDLE THRUST BEARING (NTA-1413)	2		
608	955-305	COVER	1		
609	955-306	NEEDLE BEARING (NTN BK1012)	1		
610	948-227	RETAINING RING FOR D47 HOLE	1		
611	955-307	PINION	1		
612	955-308	SLEEVE	1		
613	955-309	WASHER	1		
614	955-310	SOCKET COVER	1		
615	955-311	SOCKET	1		
616	303-247	SEAL LOCK HEX. SOCKET HD. BOLT M5X25	6		
617	873-537	SOCKET PIN	1		
618	873-187	O-RING (J1SW1516)	1		
619	991-481	FORM TIE SOCKET ASS'Y 10MMX95L	1	INCLUD.617,618	
620	992-610	UNIVERSAL JOINT ASS'Y	1	INCLUD.617,618	
621	955-153	UNIVERSAL JOINT PIN	1		
622	991-476	BIT ADAPTER ASS'Y	1	INCLUD.617,618	
623	944-291	HEX. SOCKET ASS'Y 10MMX40L	1	INCLUD.617,618	
624	873-632	HEX. SOCKET ASS'Y 12MMX40L	1	INCLUD.617,618	
625	873-539	HEX. SOCKET ASS'Y 13MMX40L	1	INCLUD.617,618	
626	873-540	HEX. SOCKET ASS'Y 14MMX40L	1	INCLUD.617,618	
627	873-536	HEX. SOCKET ASS'Y 17MMX32L	1	INCLUD.617,618	

★ : ALTERNATIVE PARTS

OPTIONAL ACCESSORIES

WR 12DH

ITEM NO.	CODE NO.	DESCRIPTION	NO. USED	REMARKS	
628	873-624	HEX. SOCKET ASS'Y 19MMX34L	1	INCLUD.617,618	
629	873-626	HEX. SOCKET ASS'Y 21MMX36L	1	INCLUD.617,618	
630	873-627	HEX. SOCKET ASS'Y 22MMX40L	1	INCLUD.617,618	
631	986-058	HEX. SOCKET FOR PLASTIC CONE 12MMX70L	1	INCLUD.617,618	
632	955-151	HEX. SOCKET ASS'Y (LONG) 21MMX75L	1	INCLUD.617,618	
633	955-138	HEX. SOCKET ASS'Y (LONG) 12MMX52L	1	INCLUD.617,618	
634	955-139	HEX. SOCKET ASS'Y (LONG) 13MMX52L	1	INCLUD.617,618	
635	955-140	HEX. SOCKET ASS'Y (LONG) 14MMX52L	1	INCLUD.617,618	
636	955-141	HEX. SOCKET ASS'Y (LONG) 17MMX52L	1	INCLUD.617,618	
637	955-142	HEX. SOCKET ASS'Y (LONG) 19MMX52L	1	INCLUD.617,618	
638	955-149	HEX. SOCKET ASS'Y (LONG) 17MMX75L	1	INCLUD.617,618	
639	955-150	HEX. SOCKET ASS'Y (LONG) 19MMX75L	1	INCLUD.617,618	
640	955-143	HEX. SOCKET ASS'Y (LONG) 21MMX52L	1	INCLUD.617,618	
641	955-144	HEX. SOCKET ASS'Y (LONG) 22MMX52L	1	INCLUD.617,618	
642	991-480	HEX. SOCKET ASS'Y (LONG) 21MMX125L	1	INCLUD.617,618	
643	873-633	EXTENSION BAR ASS'Y (SQUARE) 12.7MMX100L	1	INCLUD.617,618	
644	992-613	SOCKET ASS'Y FOR DUCT 13MMX95L	1	INCLUD.617,618,645	
645	992-614	SOCKET FOR DUCT 13MMX52L	1		
646	992-615	SOCKET ASS'Y FOR DUCT 14MMX95L	1	INCLUD.617,618,647	
647	992-616	SOCKET FOR DUCT 14MMX52L	1		
648	993-658	SOCKET ASS'Y FOR DUCT 12MMX95L	1	INCLUD.617,618,649	
649	993-659	SOCKET FOR DUCT 12MMX52L	1		
650	992-616	SOCKET FOR DUCT 14MMX52L	1		
651	307-780	HOOK (FOR CORDLESS TOOLS)	1		
652	307-824	HOLSTER	1		
653	316-665	BATTERY EB 12H (W/ENGLISH N.P.)	1	EXCEPT.NZL,AUS,USA,CAN	
654	309-922	GREASE FOR IMPACT DRIVER (500G)	1		

Printed in Japan 11 – 98
(981130 N)