HITACHI

LIST NO. E892

ELECTRIC TOOL PARTS LIST

■CORDLESS IMPACT DRIVER

Model WH 8DC2

1995・5・20
(E1)

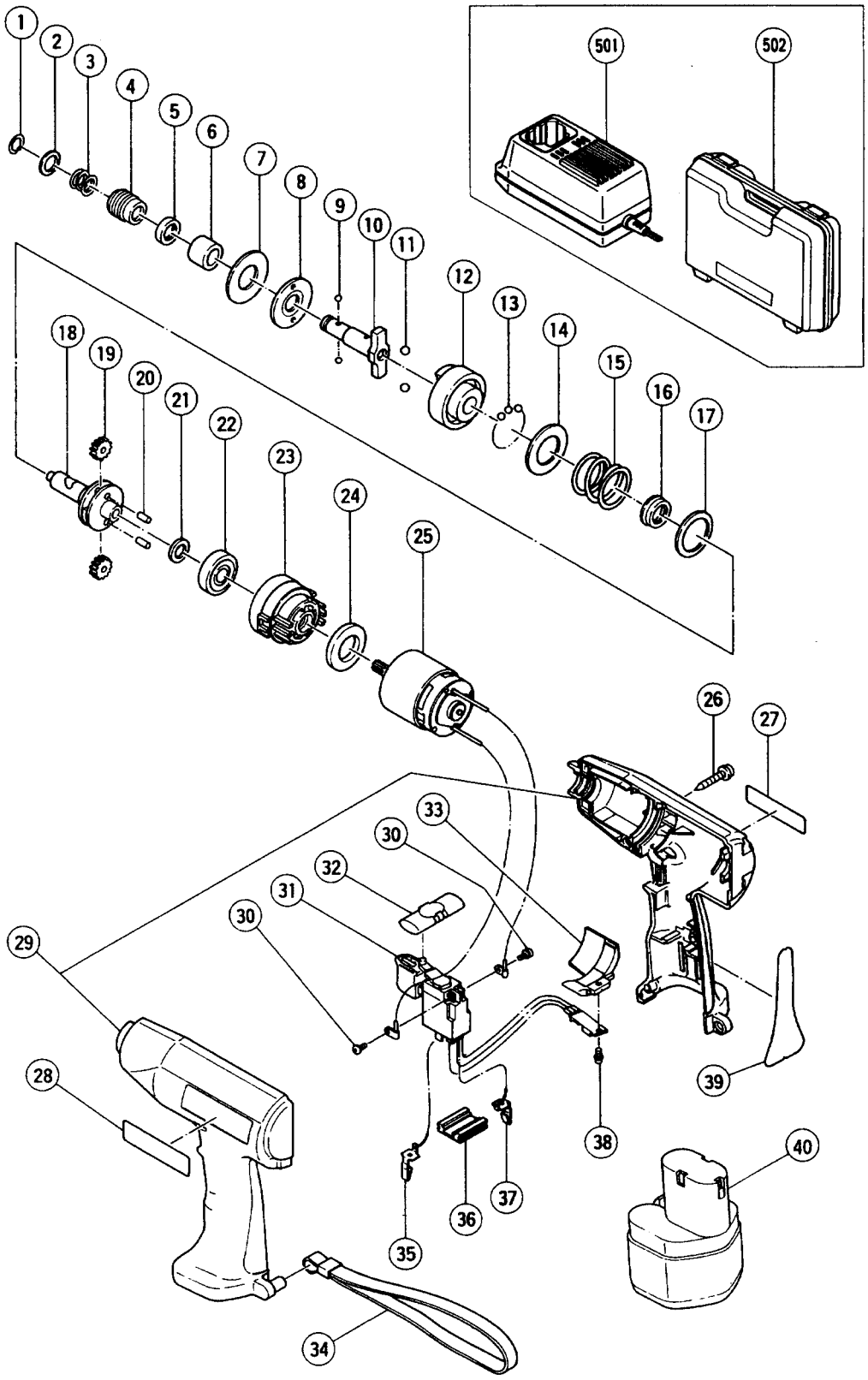

	ITEM NO.	CODE NO.	DESCRIPTION	NO. USED	REMARKS	
	1	995-933	RETAINING RING	1		
	2	307-899	RETAINER	1		
	3	995-931	GUIDE SPRING	1		
	4	307-782	GUIDE SLEEVE (A)	1		
	5	302-326	OIL SEAL	1		
	6	302-327	METAL	1		
	7	302-328	RUBBER WASHER	1		
	8	302-329	WASHER (F)	1		
	9	959-148	STEEL BALL D3.175 (10 PCS.)	2		
*	10	309-171	ANVIL (H)	1		
*	10	307-818	ANVIL (G)	1	FOR SIN	
	11	959-154	STEEL BALL D5.556 (10 PCS.)	2		
	12	302-330	HAMMER	1		
	13	959-155	STEEL BALL D3.97 (10 PCS.)	21		
	14	302-331	WASHER (G)	1		
	15	302-334	SPRING	1		
	16	310-321	STOPPER (A)	1		
	17	302-333	WASHER (H)	1		
	18	302-332	SPINDLE	1		
	19	991-448	IDLE GEAR	2		
	20	991-449	NEEDLE ROLLER	2		
	21	991-455	WASHER (C)	1		
	22	600-1VV	BALL BEARING 6001VVCMPS2L	1		
	23	310-320	INNER COVER	1		
	24	310-319	DAMPER	1		
	25	310-324	MOTOR	1		
	26	302-086	TAPPING SCREW (W/FLANGE) D4X20 (BLACK)	9		
*	27		NAME PLATE	1		
	28		HITACHI LABEL	1		
	29	310-369	HOUSING (A).(B) SET	1	INCLUD.39	
	30	994-532	MACHINE SCREW (W/SP. WASHER) M3X5	2		
	31	310-326	SWITCH ASS'Y (1P SCREW TYPE) W/O LOCK	1	INCLUD.35,37	
	32	306-151	PUSHING BUTTON	1		
	33	310-325	FIN	1		
	34	306-952	STRAP	1		
	35	310-328	TERMINAL (C) (BROWN)	1		
	36	991-666	TERMINAL SUPPORT	1		
	37	310-329	TERMINAL (C) (BLUE)	1		
	38	301-791	MACHINE SCREW (W/SP. WASHER) M3.5X6	1		
	39	310-323	GRIP TAPE	1		
*	40	991-681	BATTERY EB 9 (W/ENGLISH N.P.)	1		
*	40	991-642Z	BATTERY EB 9 (W/ENGLISH N.P.)	1	FOR TPE,SIN	
*	40	991-643Z	BATTERY EB 9 (W/FRENCH N.P.)	1	FOR FRA	
*	40	991-644Z	BATTERY EB 9 (W/ENGLISH N.P.)	1	FOR USA	

*: ALTERNATIVE PARTS

STANDARD ACCESSORIES

WH 8DC2

ITEM NO.	CODE NO.	DESCRIPTION	NO. USED	REMARKS	
501		CHARGER (MODEL UC 12Y)	1		
502	302-344	CASE	1		

OPTIONAL ACCESSORIES

ITEM NO.	CODE NO.	DESCRIPTION	NO. USED	REMARKS	
601	992-671	+ DRIVER BIT (B) NO.2 50L	1		
602	992-672	+ DRIVER BIT (B) NO.3 50L	1		
603	996-177	NON – MAGNETIC HEX. SOCKET 8MM 65L	1		
604	985-329	NON – MAGNETIC HEX. SOCKET 10MM 65L	1		
605	996-178	NON – MAGNETIC HEX. SOCKET 12MM 65L	1		
606	996-179	NON – MAGNETIC HEX. SOCKET 13MM 65L	1		
607	996-180	NON – MAGNETIC HEX. SOCKET 14MM 65L	1		
608	996-185	NON – MAGNETIC HEX. SOCKET 15MM 65L	1		
609	996-181	NON – MAGNETIC HEX. SOCKET 16MM 65L	1		
610	996-182	NON – MAGNETIC HEX. SOCKET 17MM 65L	1		
611	996-186	NON – MAGNETIC HEX. SOCKET 19MM 65L	1		
612	996-197	HEX. SOCKET (LONG) 21MMX166L	1		
613	959-183	DRILL BIT FOR WOOD (HEX. SHAFT) D14X83	1		
614	996-195	DRILL CHUCK AND ADAPTER SET	1	INCLUD.615	
615	307-543	CHUCK ADAPTER	1		
616	307-824	HOLSTER	1		
617	308-090	HOOK (FOR CORDLESS TOOLS)	1		
618	309-922	GREASE FOR INPACT DRIVER (500G)	1		

*: ALTERNATIVE PARTS