metabo HPT

ELECTRIC TOOL PARTS LIST

■ CORDLESS IMPACT DRIVER 2022 • 03 • 03

Model WH 18DFX (E1)

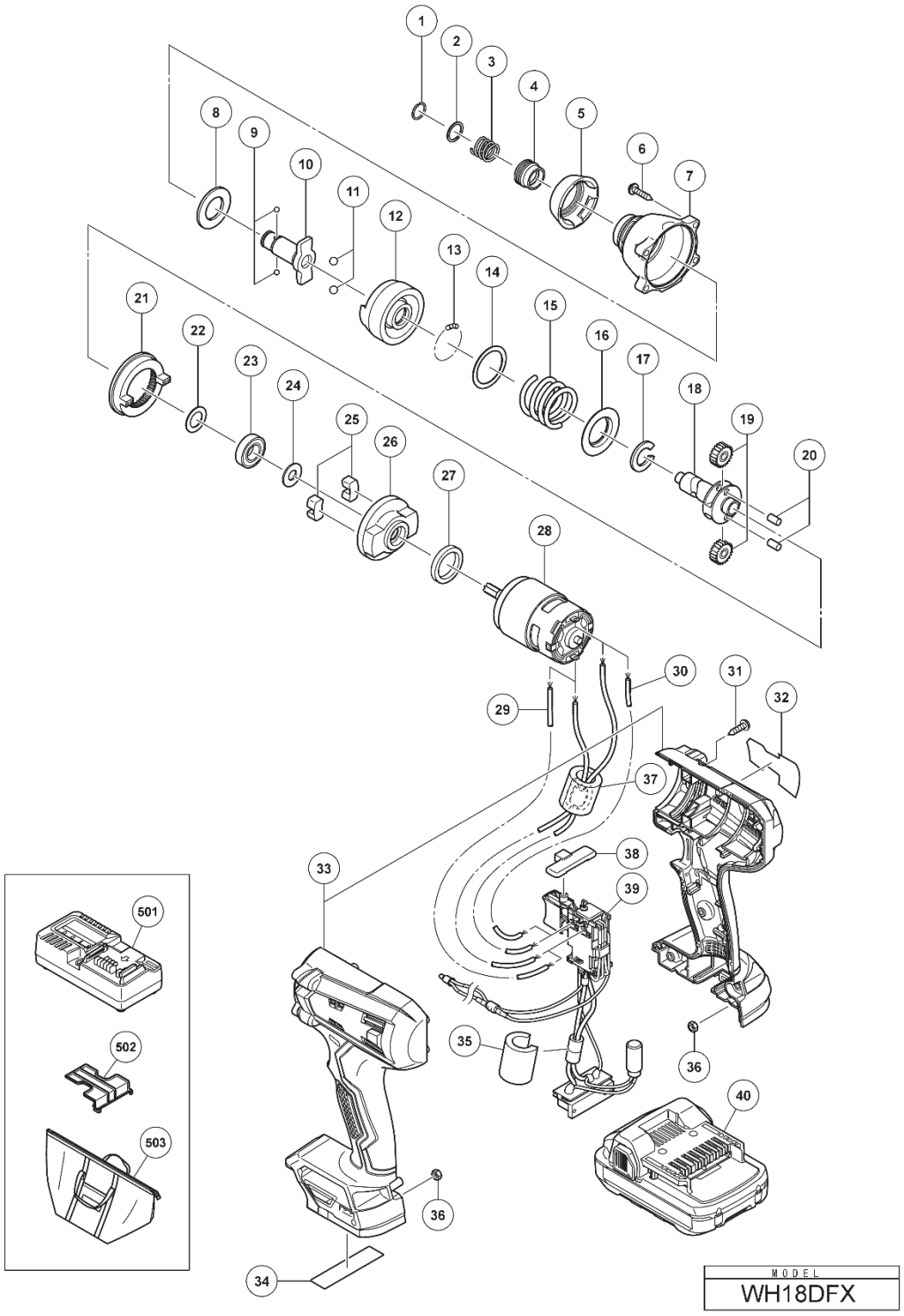

Rev.1

PARTS

WH18DFX

ITEM NO.	CODE NO.	DESCRIPTION	NO. USED	REMARKS
1	330619	RETAINING RING	1	
2	330856	WASHER (D)	1	
3	331284	GUIDE SPRING (D)	1	
4	322717	GUIDE SLEEVE (D)	1	
5	336636	FRONT CAP	1	
6	319917	TAPPING SCREW (W/SP. WASHER) D4X25(BLACK	4	
7	378369	HAMMER CASE	1	
8	336639	WASHER (F)	1	
9	319535	STEEL BALL D3.5 (10 PCS.)	2	
10	370818	ANVIL (F)	1	
11	959154	STEEL BALL D5.556 (10 PCS.)	2	
12	336641	HAMMER (C)	1	
13	959148	STEEL BALL D3.175 (10 PCS.)	28	
14	315978	WASHER (J)	1	
15	336640	HAMMER SPRING (K)	1	
16	316172	WASHER (S)	1	
17	316171	STOPPER	1	
18	335912	SPINDLE (E)	1	
19	326295	IDLE GEAR SET (2 PCS.)	2	
20	319914	NEEDLE ROLLER	2	
21	330657	RING GEAR	1	
22	319911	WASHER (E)	1	
23	6901VV	BALL BEARING 6901VV	1	
24	331288	FELT	1	
25	324230	DAMPER (A)	2	
26	331286	INNER COVER	1	
27	321894	DAMPER	1	
28	336628	MOTOR DC 18V	1	
**29	323165	INTERNAL WIRE (BLACK) 75L	1	FOR USA.CAN
**30	329529	INTERNAL WIRE (RED) 140L	1	FOR USA.CAN
31	313687	TAPPING SCREW (W/FLANGE) D3X16 (BLACK)	8	
32		LABEL	1	
**33	378366M	HOUSING (A).(B) SET	1	FOR USA.CAN
34		LABEL	1	
36	327002	LOCK NUT M4 (BLACK)	2	
38	329548	PUSHING BUTTON (A)	1	
**39	336630	SWITCH TERMINAL SET	1	FOR USA.CAN
40	377797M	BATTERY BSL 1820M (USA.CAN)	1	INCLUD.502

STANDARD ACCESSORIES

WH18DFX

ITEM NO.	CODE NO.	DESCRIPTION	NO. USED	REMARKS
501	UC18YKSL	CHARGER	1	
502	329897	BATTERY COVER	1	
503	375801M	TOOL BAG	1	

OPTIONAL ACCESSORIES

ITEM NO.	CODE NO.	DESCRIPTION	NO. USED	REMARKS
601	321823	DRILL CHUCK AND ADAPTER SET	1	
602	309922	GREASE (ATTOLUB MS NO.2) 500G	1	
603	992671	+ DRIVER BIT (B) NO.2 50L	1	
604	992672	+ DRIVER BIT (B) NO.3 50L	1	
605	996177	NON-MAGNETIC HEX. SOCKET 8MM 65L	1	
606	985329	NON-MAGNETIC HEX. SOCKET 10MM 65L	1	
607	996178	NON-MAGNETIC HEX. SOCKET 12MM 65L	1	
608	996179	NON-MAGNETIC HEX. SOCKET 13MM 65L	1	
609	996180	NON-MAGNETIC HEX. SOCKET 14MM 65L	1	
610	996185	NON-MAGNETIC HEX. SOCKET 15MM 65L	1	
611	996181	NON-MAGNETIC HEX. SOCKET 16MM 65L	1	
612	996182	NON-MAGNETIC HEX. SOCKET 17MM 65L	1	
613	996186	NON-MAGNETIC HEX. SOCKET 19MM 65L	1	
614	996197	HEX. SOCKET (LONG) 21MMX166L	1	
615	996184	BIT PIECE	1	
616	987575	CHUCK WRENCH FOR 10VLB-D.10VLR-D	1	
617	930119	CHUCK WRENCH 6.5G	1	
618	307543	CHUCK ADAPTER	1	
619	306927	SILICONE RUBBER	1	
620	375800	HOOK SET	1	
621	306952	STRAP (BLACK)	1	