HITACHI

LIST NO. F825

ELECTRIC TOOL PARTS LIST

■ CHARGER

1998·8·31

Model UC 24YF

(E1)

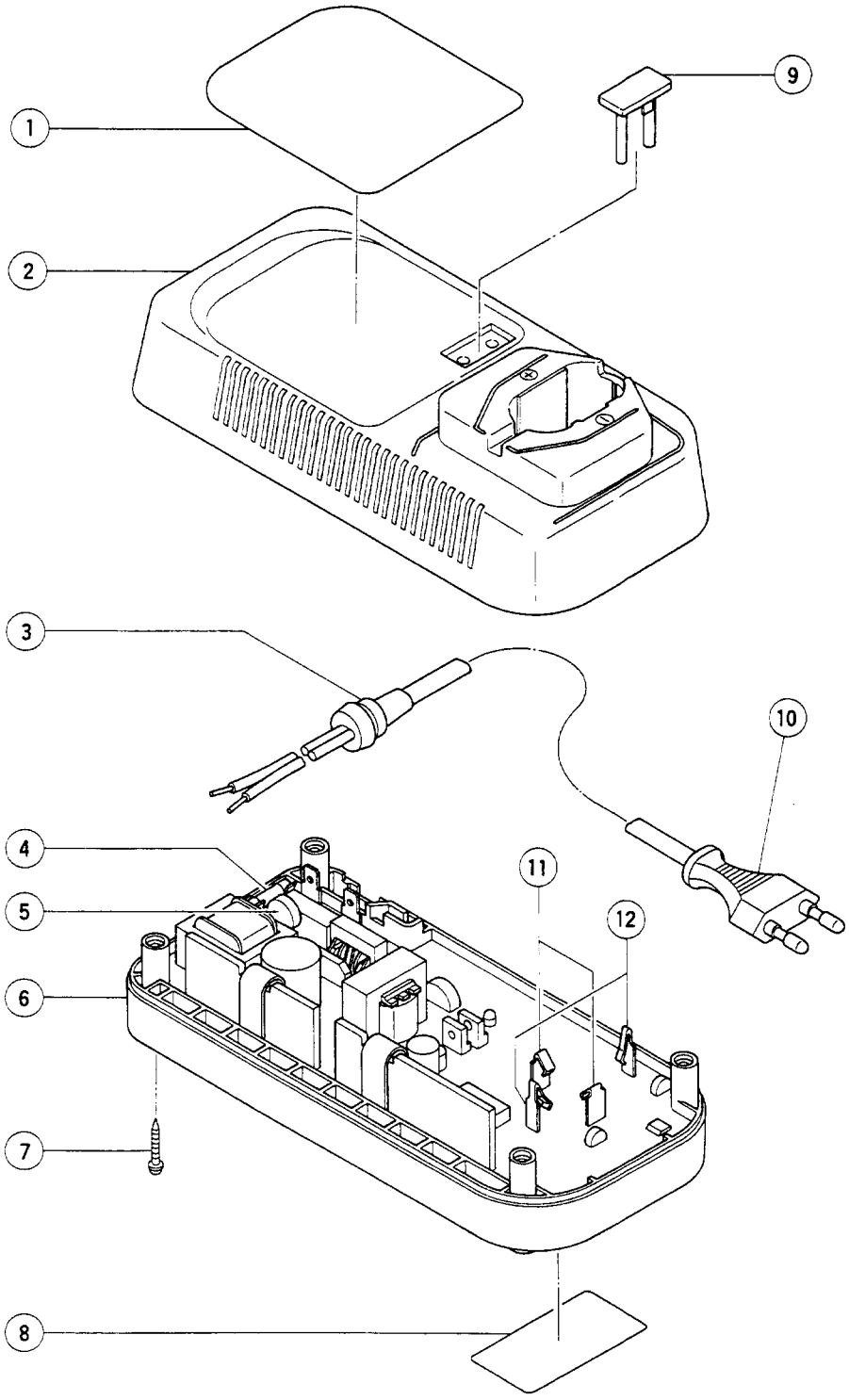

	ITEM NO.	CODE NO.	DESCRIPTION	NO. USED	REMARKS	
	1		HITACHI LABEL	1		
*	2	315-150	CASE (A)	1		
*	2	316-960	CASE (A)	1	FOR USA,AUS	
*	3	991-167	CORD ARMOR	1	FOR HOL,GBR,AUS	
*	4	307-658	FUSE (3.15A)	1		
*	4	316-964	FUSE (3.15A)	1	FOR USA	
*	5	305-087	VARISTOR	1		
*	5	314-186	VARISTOR	1	FOR USA	
*	6	316-961	CASE (B)	1	INCLUD.4,5,11,12	
*	6	316-962	CASE (B)	1	INCLUD.4,5,11,12 FOR USA	
*	6	316-963	CASE (B)	1	INCLUD.4,5.11,12 FOR AUS	
	7	300-036	TAPPING SCREW (W/FLANGE) D3X20	4		
	8		NAME PLATE	1		
	9	315-151	PRISM	1		
*	10	980-642Z	CORD	1	FOR HOL	
*	10	307-216	CORD	1	FOR GBR	
*	10	309-169	CORD	1	FOR AUS	
*	10	313-262	CORD	1	FOR USA	
	11	306-880	TERMINAL (A)	1		
	12	306-881	TERMINAL (B)	1		

* : ALTERNATIVE PARTS

Printed in Japan 8 – 98
(980831 N)