Hitachi Power Tools

LIST NO. G845

ELECTRIC TOOL PARTS LIST

■ CHARGER

2006・6・22

Model UC 18YRL

(E1)

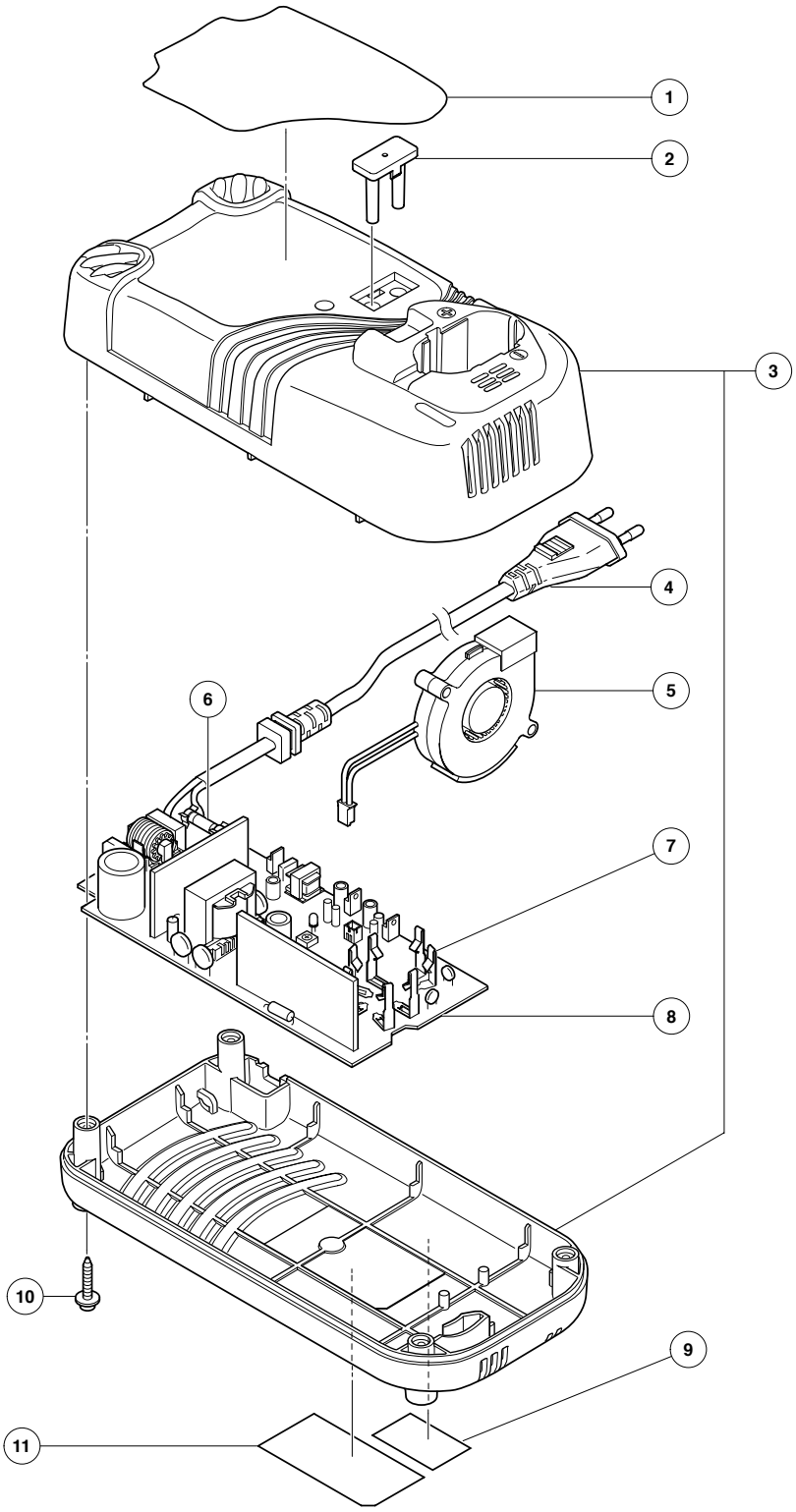

	ITEM NO.	CODE NO.	DESCRIPTION	NO. USED	REMARKS	
	1		HITACHI LABEL	1		
	2	321-679	PRISM	1		
	3	326-281	CASE (A).(B) SET	1		
*	4	318-262	CORD	1		
*	4	318-261	CORD	1	FOR GBR	
*	4	318-259	CORD	1	FOR USA, CAN	
*	4	318-260	CORD	1	FOR AUS	
	5	326-306	FAN	1		
*	6	319-781	FUSE (125V-3.15A)	1		
*	6	319-780	FUSE (250V-3.15A)	1		
	7	326-285	TERMINAL (A)	7		
*	8		PRINTED CIRCUIT BOARD ASS'Y 120V	1	INCLUD. 6, 7	
*	8		PRINTED CIRCUIT BOARD ASS'Y 230V-240V	1	INCLUD. 6, 7	
*	9		CAUTION LABEL	1	FOR USA, CAN	
	10	300-036	TAPPING SCREW (W/FLANGE) D3X20	4		
	11		NAME PLATE	1		

* ALTERNATIVE PARTS

Printed in Japan 6 – 06
(060622N)