SKIL®
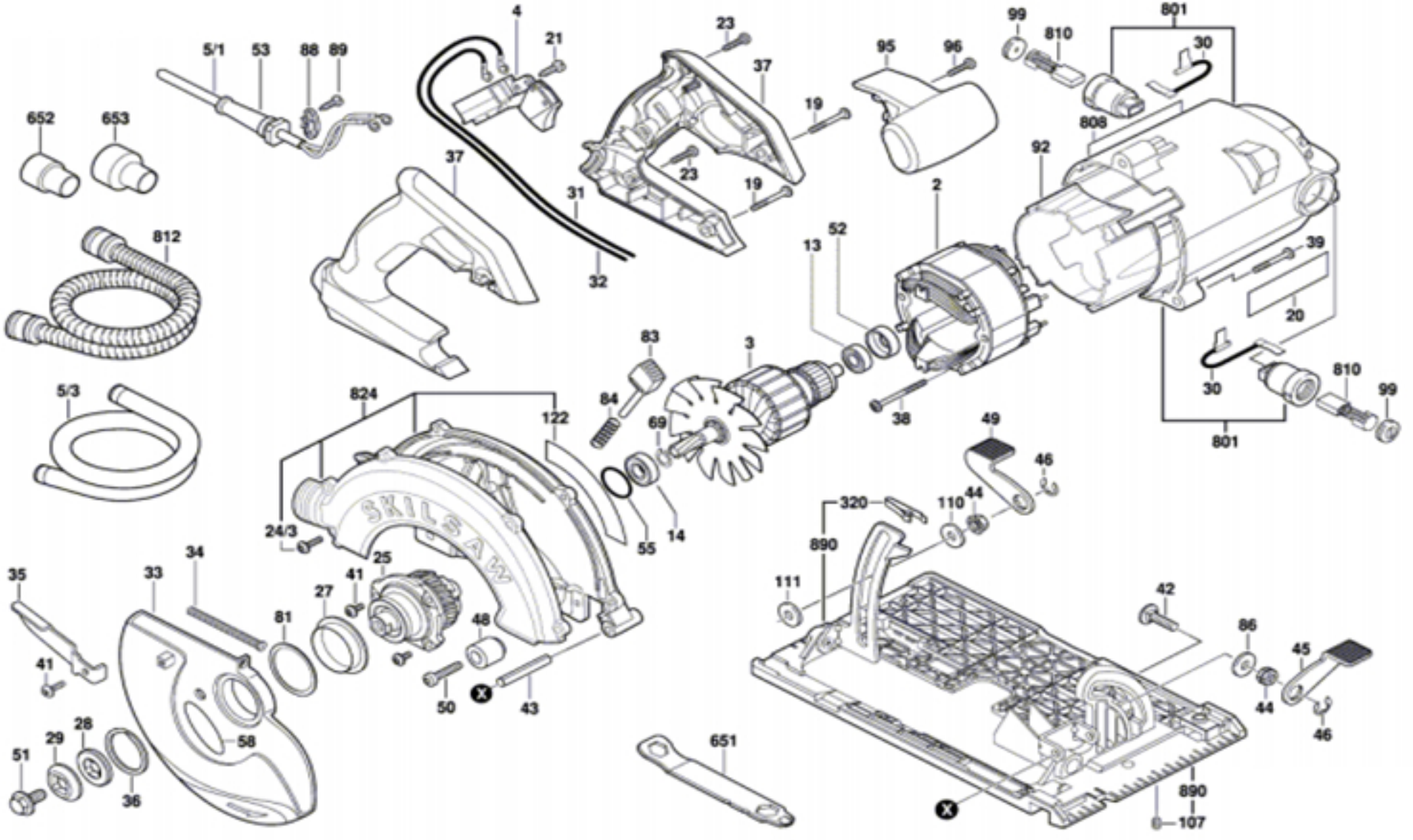
Product Description: Circular Saw
Model Number: SPT67FMD-01/22
Body Number: 0610225001
Version: A
Issue Date: 2016/06/20