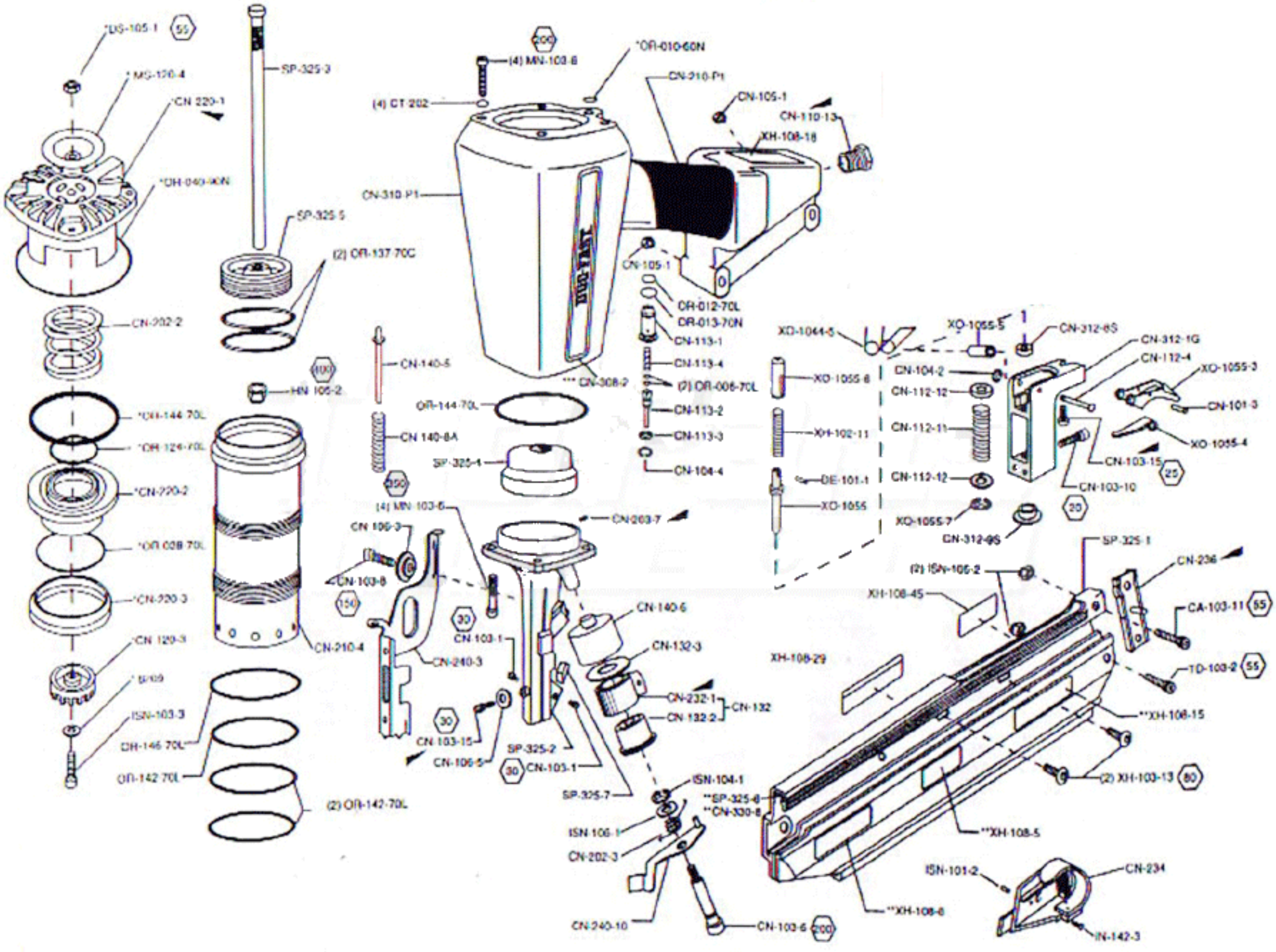

*DS-105-1
55
*MS-120-4
*CN 220-1
*OR-040-90N
SP-325-3
SP-325-5
(2) OR-137-70C
CN-202-2
*OR-144-70L
*OR-124-70L
*CN-220-2
*OR-028-70L
*CN-220-3
*CN 120-3
ISN-103-3
OR-146-70L
OR-142-70L
(2) OR-142-70L
HN 105-2
CN-210-4
(4) MN-103-6
(4) CT-202
*OR-010-60N
CN-210-P1
CN-105-1
CN-110-13
XH-108-18
CN-310-P1
CN-105-1
OR-012-70L
OR-013-70N
CN-113-1
CN-113-4
(2) OR-006-70L
CN-113-2
CN-113-3
CN-104-4
*** CN-308-2
CN-140-5
OR-144-70L
CN 140-8A
SP-325-4
(4) MN-103-6
CN 106-3
CN-103-8
150
CN-203-7
CN-140-6
CN-132-3
CN-232-1
CN-132
CN-132-2
CN-103-1
CN-240-3
CN-103-15
CN-106-5
SP-325-2
CN-103-1
SP-325-7
ISN-104-1
ISN-106-1
CN-202-3
CN-240-10
CN-103-6
200
XO-1044-5
XO-1055-5
CN-312-8S
CN-312-1G
CN-112-4
XO-1055-3
CN-104-2
CN-112-12
CN-101-3
XO-1055-6
CN-112-11
XH-102-11
XO-1055-4
CN-103-15
25
DE-101-1
CN-112-12
CN-103-10
XO-1055
20
XO-1055-7
CN-312-9S
SP-325-1
CN-236
(2) ISN-105-2
XH-108-45
CA-103-11
55
XH-108-29
TD-103-2
55
**XH-108-15
(2) XH-103-13
80
**SP-325-8
**CN-330-8
**XH-108-5
ISN-101-2
CN-234
**XH-108-8
IN-142-3