7.2V CORDLESS DRILL KIT
RY721K2

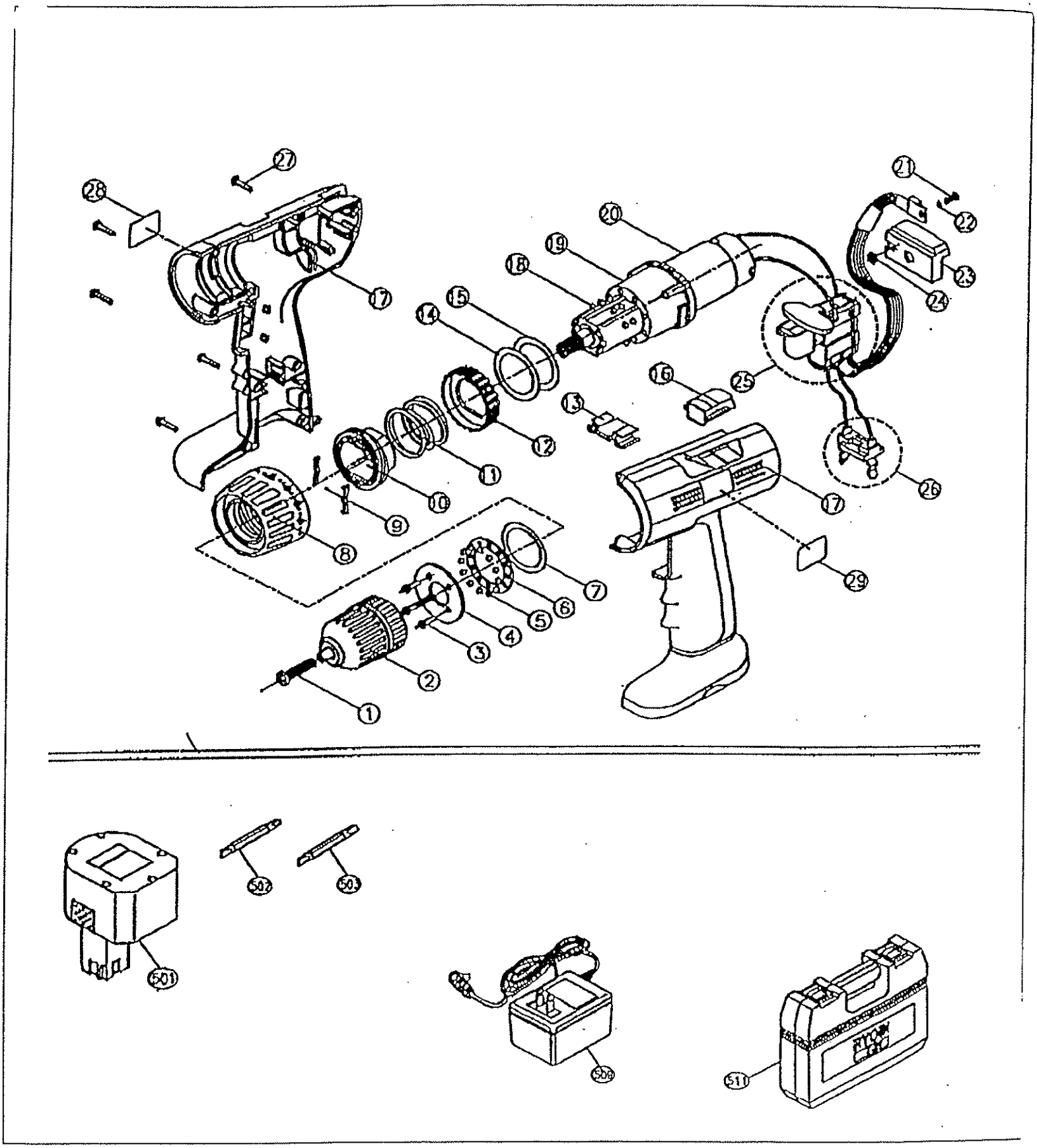

PARTS LIST FOR AFTER SALES SERVICE

MODEL RY721K2

REF	PART NO.	DESCRIPTION	QTY	REF	PART NO.	DESCRIPTION	QTY
	1130049	SCREW M5X0.8X26MM	1			STANDARD ACCESSORIES	
2	974430001	KEYLESS 3/8 CHUCK	1	501	1400668	7.2V BATTERY PACK	1
3	1130302	SCREW M3X14	4	502	4240014	DOUBLE BIT #2	1
4	4900094	MOUNTING PLATE	1	503	4240015	DOUBLE BIT #3	1
5	1290021	STEEL BALL 3MM	8	509	4400100	ADAPTOR,120V-AC	1
6	4190002	BALL HOLDER, PLASTIC	1	511	4770035	CARRYING CASE	1
7	4900095	WASHER	1				
8	4900102	CLUTCH CAP	1		972000570	OPERATOR'S MANUAL	1
9	4180026	SPRING PLATE	2				
10	4900097	PLASTIC SLEEVE	1				
11	4180030	TORQUE SPRING	1				
12	4360009	LOCATION CUP, PLASTIC	1				
13	4360006	BIT HOLDER	1				
14	4900099	CLUTCH WASHER	1				
15	4900104	STAINLESS WASHER	1				
16	4950034	LEVELLER ASSY	1				
17	4800037	HOUSING	1				
18	4750013	STEEL BALL 4MM	16				
19	4050010	GEAR BOX	1				
20	4030018	MOTOR ASSY	1				
25	4550042	SWITCH ASSY 2-SPEED	1				
26	4560027	CONTACT PLATE HOLDER	1				
[illegible]	1130304	SET SCREW	8				
28	4910045	RATING LABEL	1				
29	4910046	BRAND LABEL	1				

SERVICE NOTES