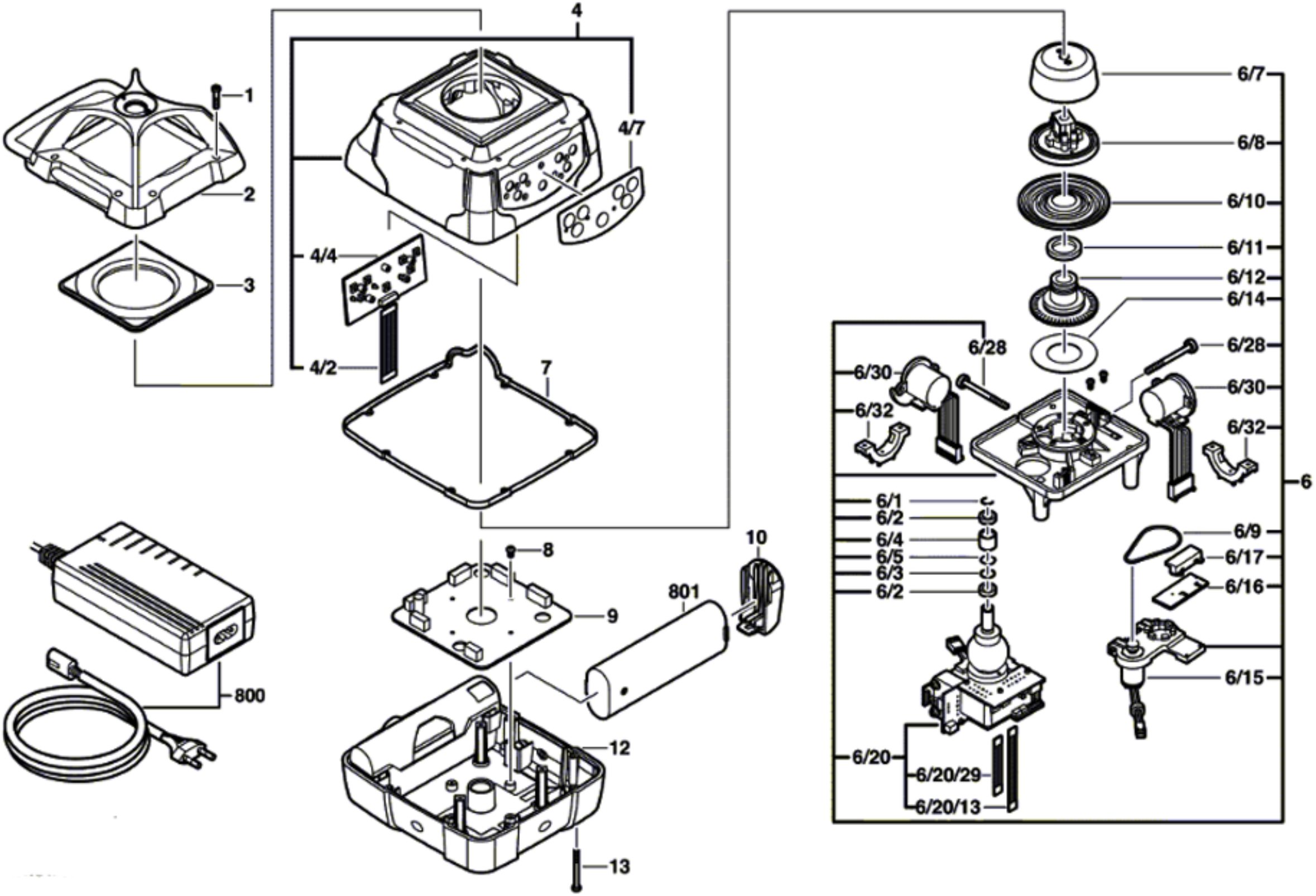
1
2
3
4
4/7
4/4
4/2
7
8
9
10
801
800
12
13
6/7
6/8
6/10
6/11
6/12
6/14
6/28
6/28
6/30
6/30
6/32
6/32
6
6/1
6/2
6/4
6/5
6/3
6/2
6/9
6/17
6/16
6/15
6/20
6/20/29
6/20/13