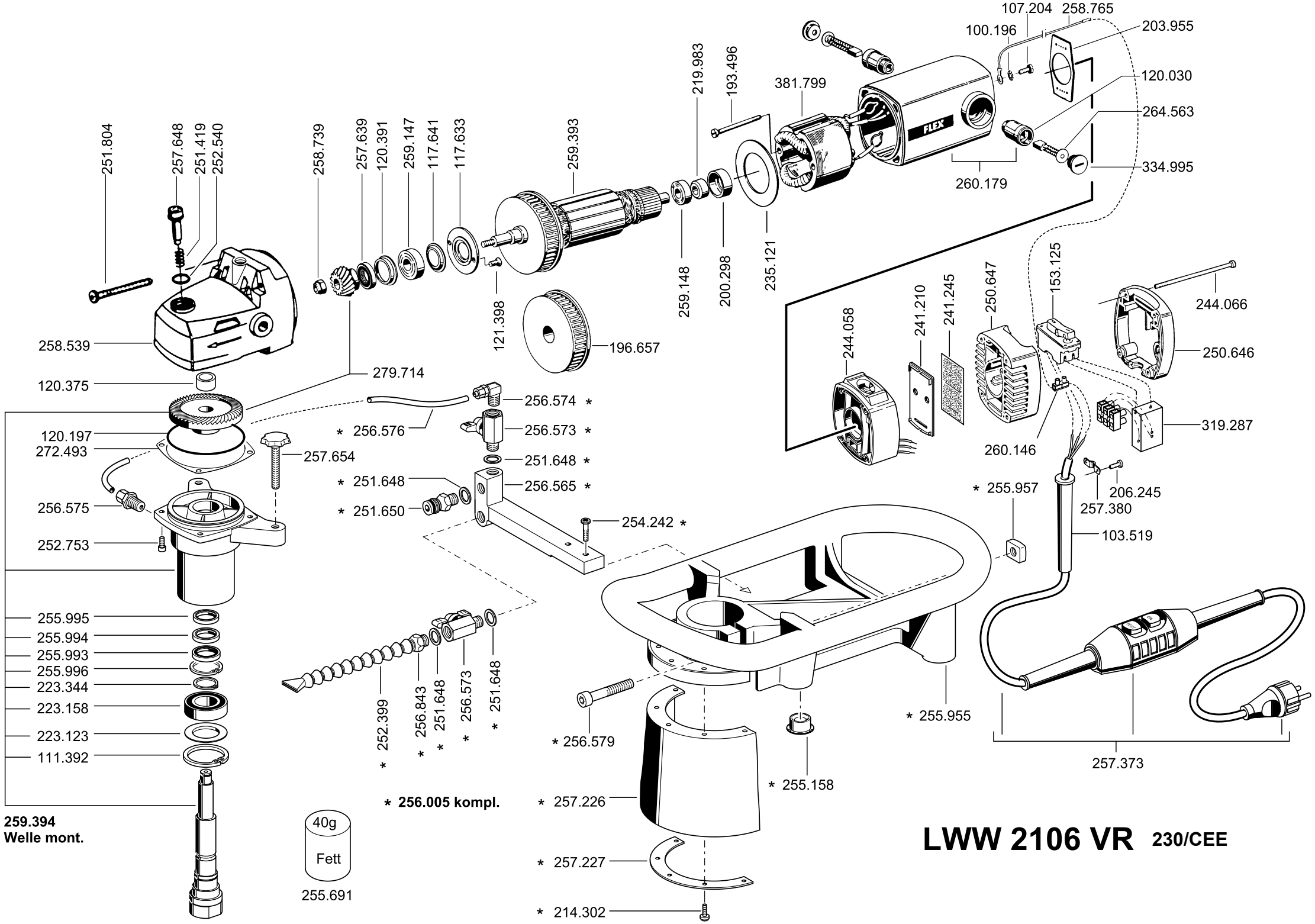
107.204
258.765
100.196
203.955
120.030
264.563
334.995
260.179
381.799
193.496
219.983
251.804
257.648
251.419
252.540
258.739
257.639
120.391
259.147
117.641
117.633
259.393
259.148
200.298
235.121
121.398
196.657
244.058
241.210
241.245
250.647
153.125
244.066
250.646
258.539
279.714
120.375
120.197
272.493
257.654
256.574 *
* 256.576
256.573 *
251.648 *
* 251.648
256.565 *
* 251.650
254.242 *
260.146
319.287
* 255.957
206.245
257.380
103.519
256.575
252.753
255.995
255.994
255.993
255.996
223.344
223.158
223.123
111.392
252.399 *
256.843 *
251.648 *
256.573 *
* 251.648
* 256.579
* 255.955
* 255.158
257.373
* 256.005 kompl.
* 257.226
* 257.227
* 214.302
259.394
Welle mont.
40g
Fett
255.691
LWW 2106 VR 230/CEE