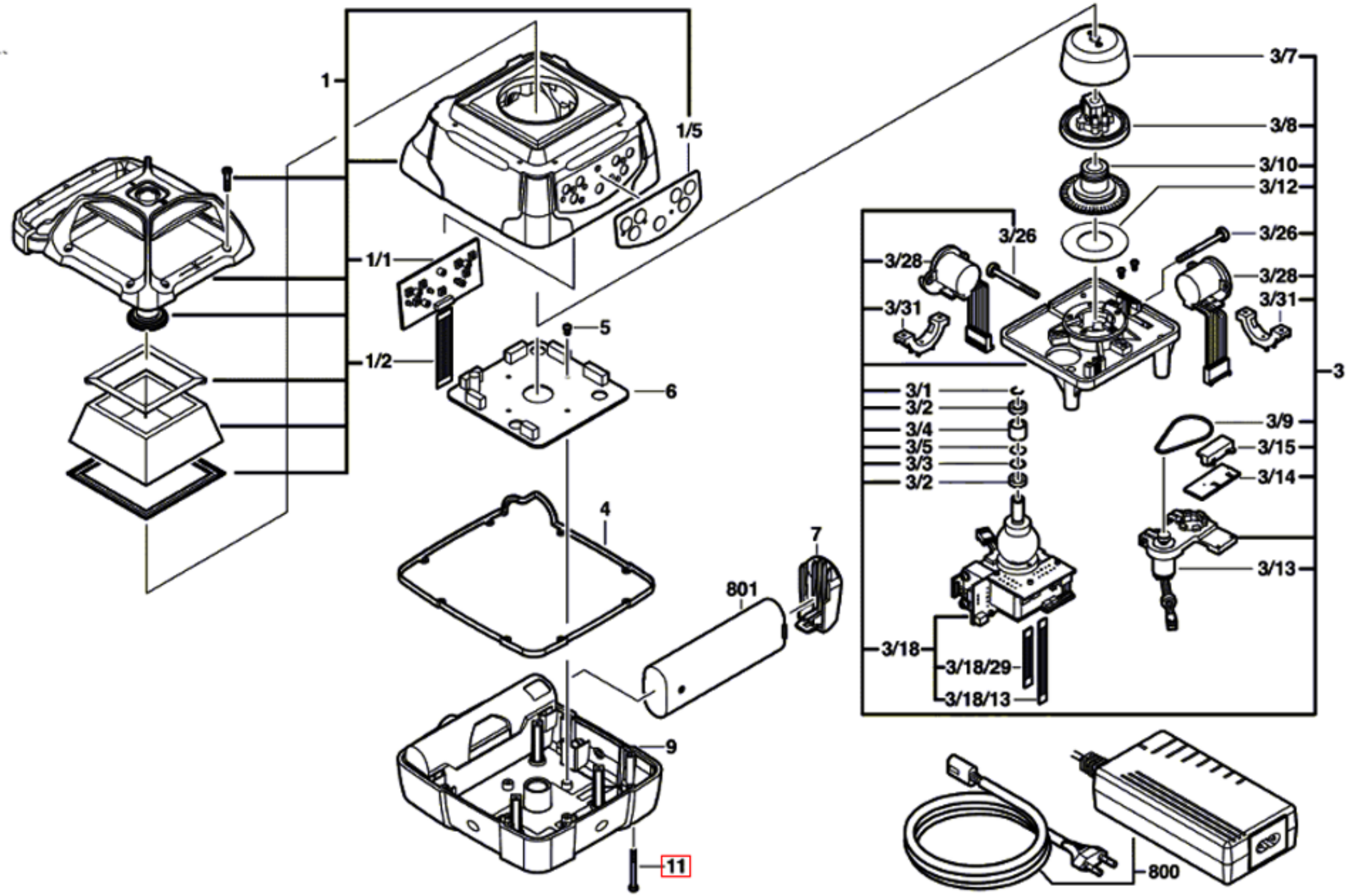
1
1/5
1/1
1/2
5
6
4
7
801
9
11
3/7
3/8
3/10
3/12
3/26
3/26
3/28
3/28
3/31
3/31
3
3/1
3/2
3/4
3/5
3/3
3/2
3/9
3/15
3/14
3/13
3/18
3/18/29
3/18/13
800