Drill

GBM 23-2 | 0 601 121 160

Table of Content

Spare parts list..... 2

Illustration - Type..... 5

Robert Bosch Power Tools GmbH
Max-Lang-Strasse 40-46
DE-70771 Leinfelden-Echterdingen
https://www.boschtoolservice.com

Illustration - Type - E

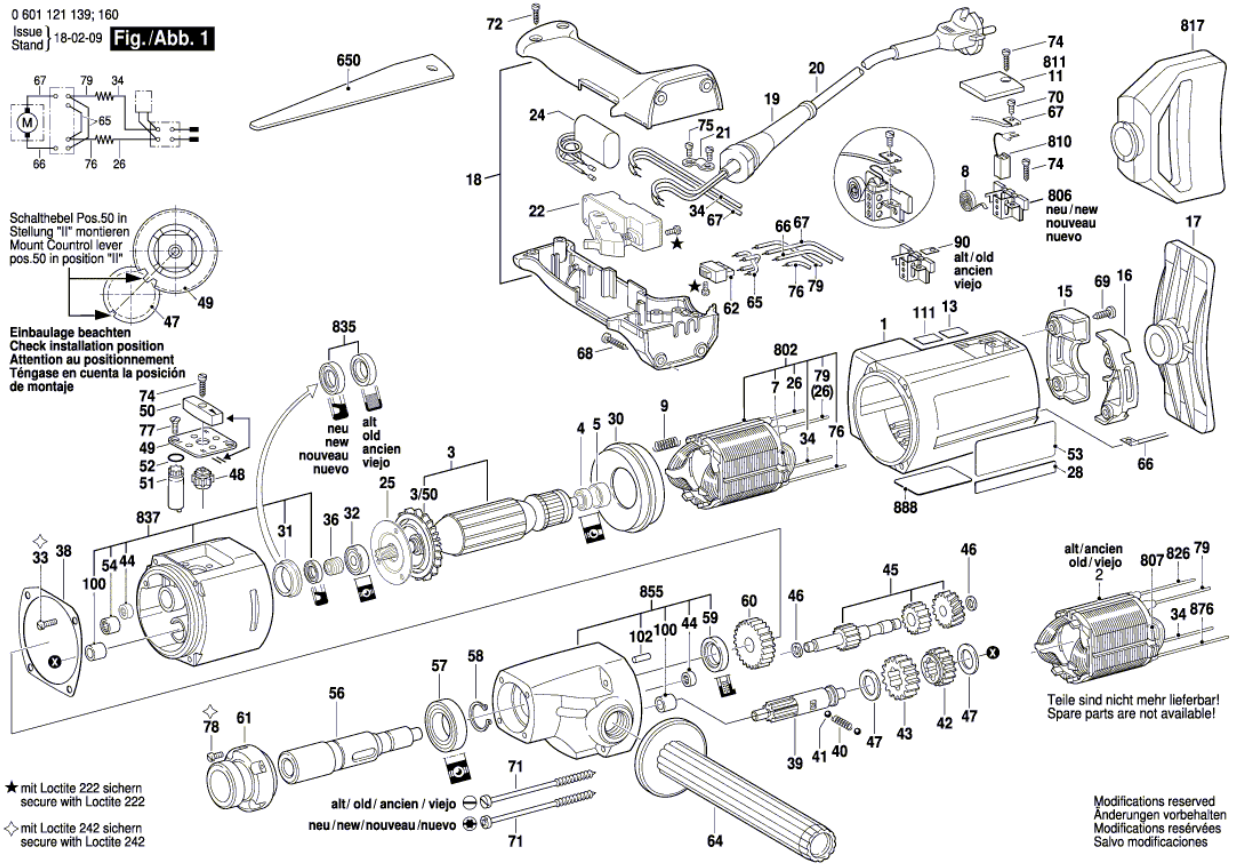

Robert Bosch Power Tools GmbH
Max-Lang-Strasse 40-46
DE-70771 Leinfelden-Echterdingen
https://www.boschtoolservice.com