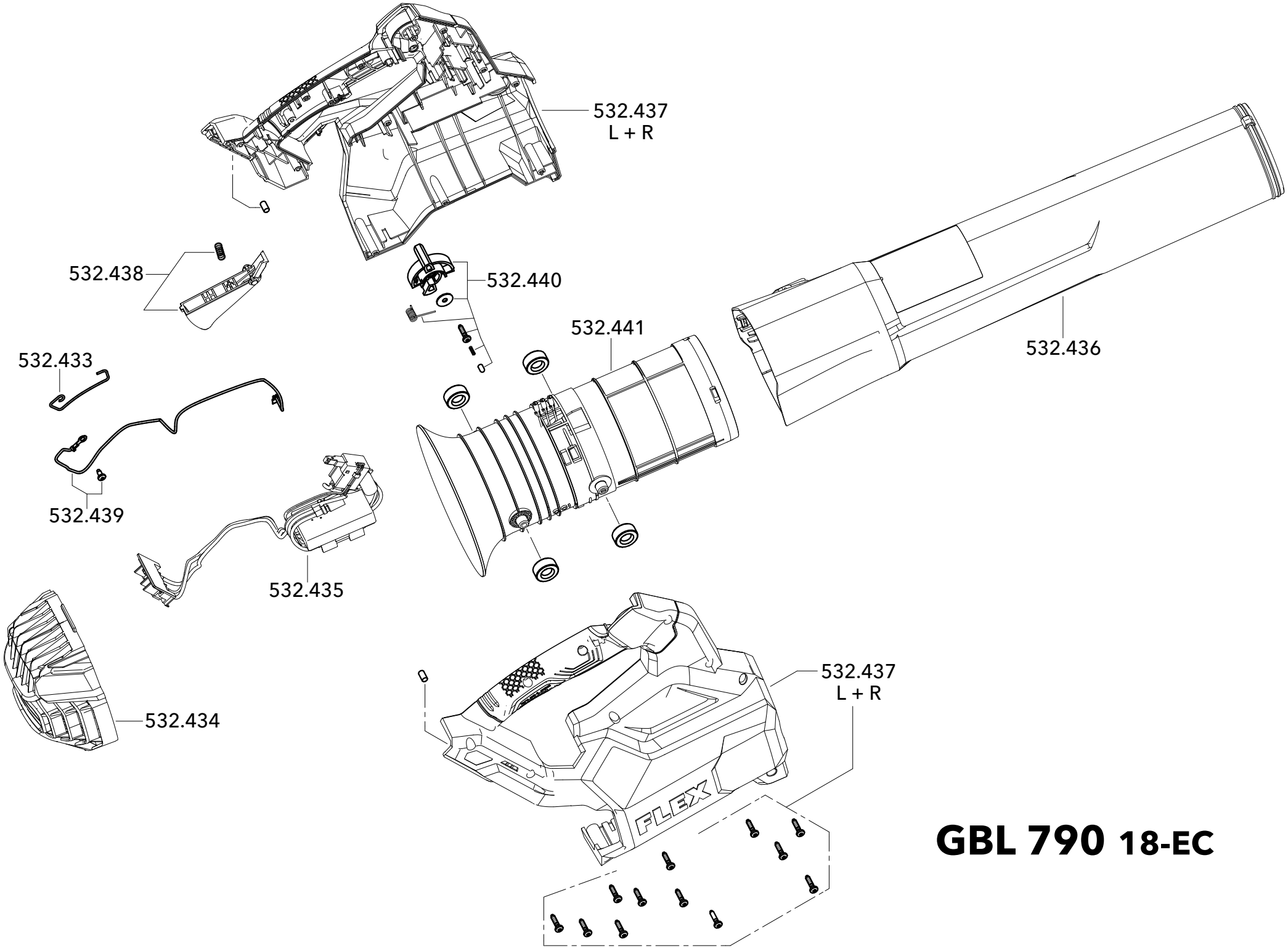
532.437
L + R
532.438
532.440
532.441
532.436
532.433
532.439
532.435
532.434
532.437
L + R
FLEX

GBL 790 18-EC