metabo HPT

ELECTRIC TOOL PARTS LIST

■ ELECTRIC AIR COMPRESSOR 2016 • 07 • 18
Model EC 710S (E1)

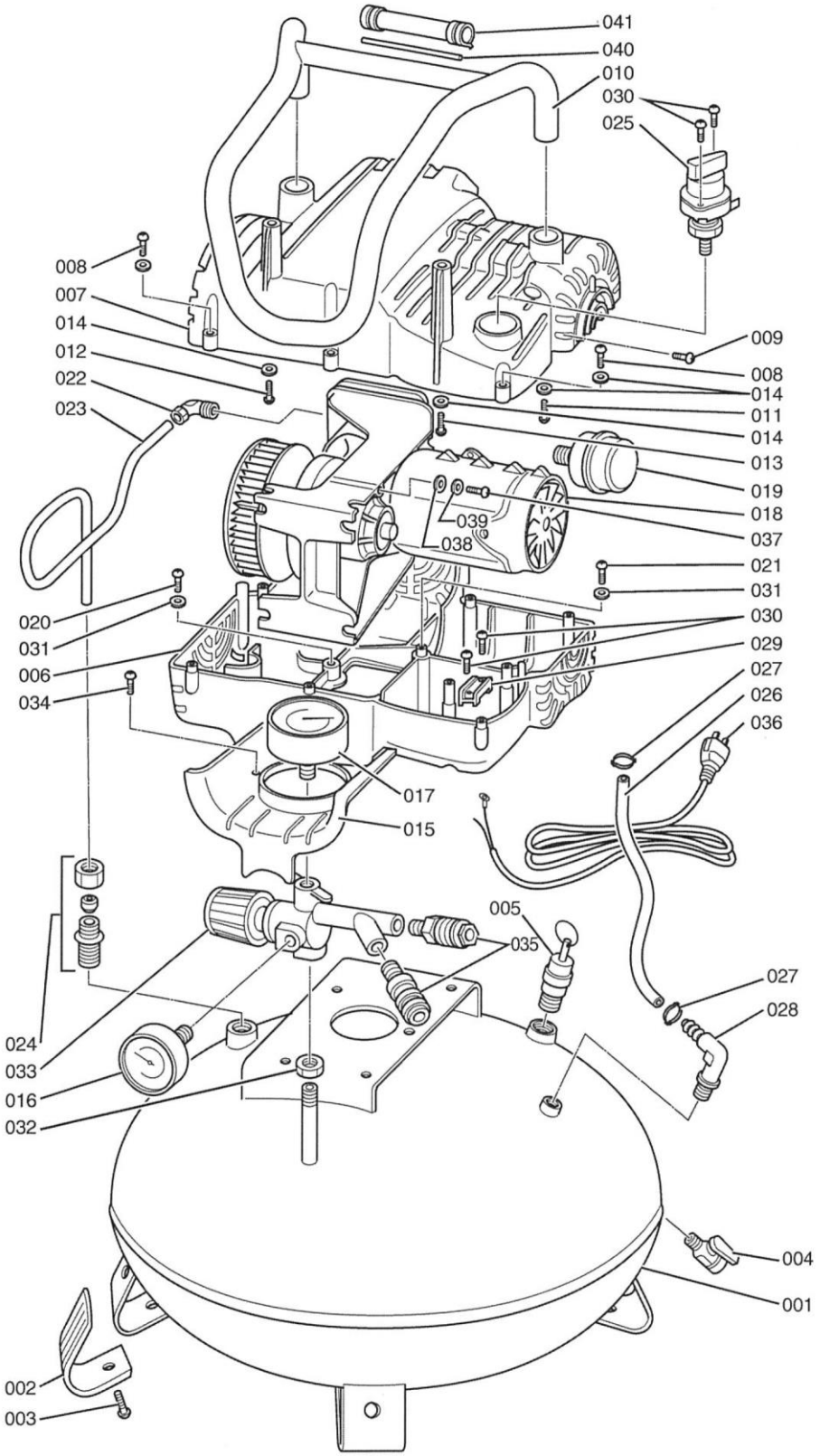

ITEM NO.	CODE NO.	DESCRIPTION	NO. USED	REMARKS
001	888908	AIR VESSEL	1	9413532035
002	888909	FOOT	4	9038773
003	888910	SCREW M6X13 (SELF TAPPING)	8	9115014
004	888911	DRAINING VALVE	1	9047062
005	888912	SAFETY VALVE	1	9049115
006	888913	HULL	1	9069065
007	888914	SHROUD	1	9069066
008	888915	SCREW 5X23 (PLASTIC)	10	9142803
009	888916	SCREW 4X12 (PARKER)	2	9114286
010	888917	HANDLE	1	9083493
011	888918	SCREW TBEI M6X20	2	9104148
012	888919	SCREW TCEI M5X55	1	9415429
013	888920	SCREW TCEI M6X75	1	9101985
014	888921	WASHER 6X12X1.5	4	9131641
015	888922	PANEL	1	9069067
016	888923	GAUGE 40 (1.5”)	1	9052209
017	888924	GAUGE 50 (2”)	1	9414744
018	888925	PUMP	1	9417580
019	888926	AIR FILTER	1	9054023
020	888927	SRCEW TCEI 6X30	3	9415853
021	888928	SCREW TCEI 6X45	1	9101560
022	888929	ELBOW	1	9050674
023	888930	DELIVERY PIPE	1	9043743
024	888931	CHECK VLAVE	1	9048126
025	888932	PRESURE SWITCH	1	9063276
026	888933	RUBBER HOSE		9045670
027	888934	WORM GEAR CLAMP	2	9050698
028	888935	FITTING BARB	1	9417577
029	888936	LOCK CABLE	1	9064830
030	888937	SCREW 4.2X19 (PARKER)	4	9412472
031	888938	WASHER 16X6, 5X2	4	9417072
032	888939	NUT	1	9050567
033	888940	PRESSURE REDUCER	1	9051232
034	888941	SCREW TCEI M5X10	2	4106156
035	888942	QUICK COUPLER	2	9047086
036	888943	POWER CORD WITH PLUG	1	9065680
037	888944	SCREW 4X8	1	9114042
038	888945	SPRING WASHER	1	4100795
039	888946	WASHER SHEET M4	1	9134403
040	888947	PIN FOR HANDLE GRIP	1	9416872
041	888948	HANDLE GRIP	1	9069060

ITEM NO.	CODE NO.	DESCRIPTION	NO. USED	REMARKS

STANDARD ACCESSORIES

EC710S

ITEM NO.	CODE NO.	DESCRIPTION	NO. USED	REMARKS

OPTIONAL ACCESSORIES

ITEM NO.	CODE NO.	DESCRIPTION	NO. USED	REMARKS