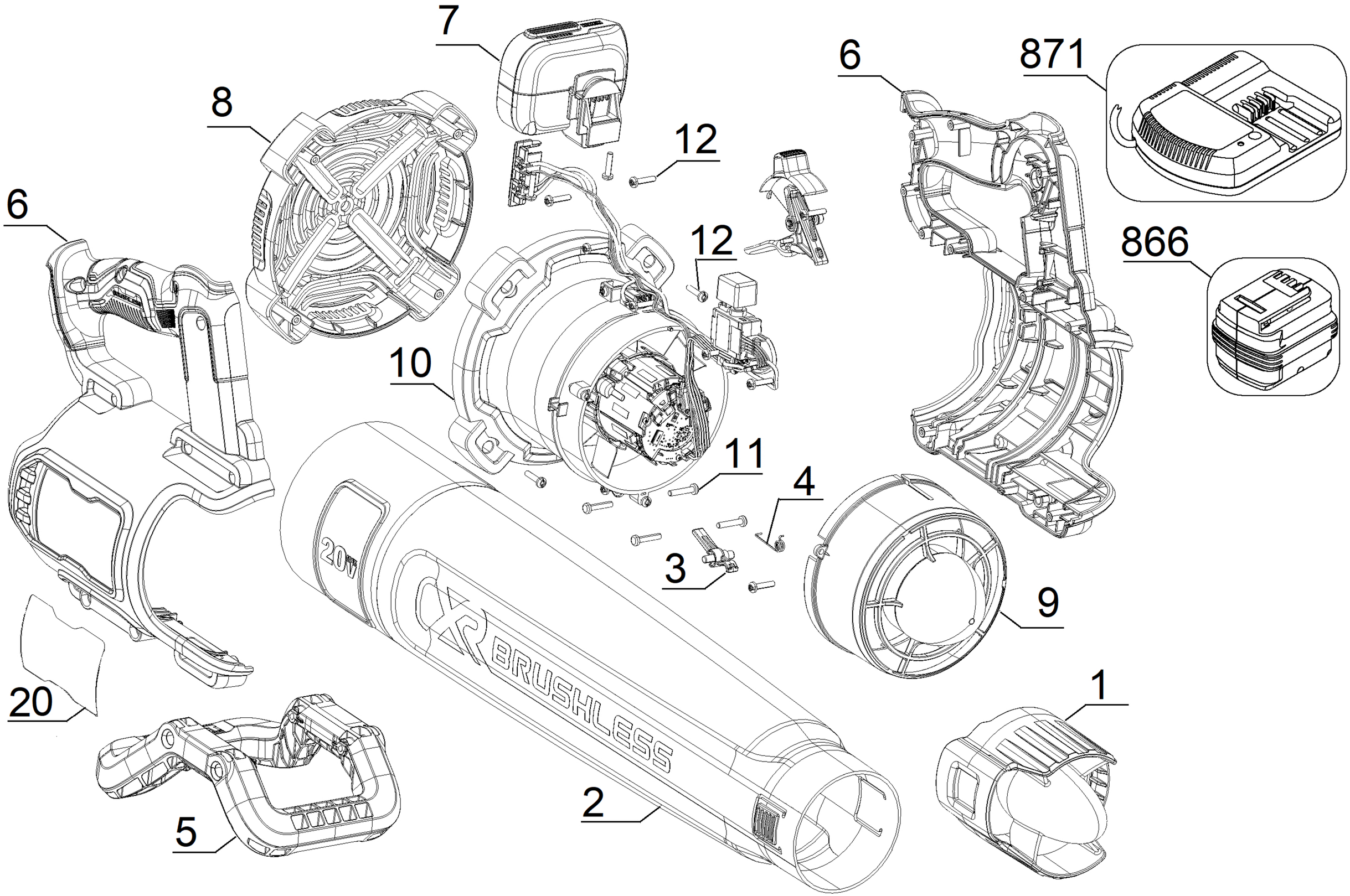
7
8
6
12
12
10
11
4
3
6
871
866
9
1
20
5
2
20V
BRUSHLESS