LIST NO. 0148

ELECTRIC TOOL PARTS LIST

■ 1/4"(6mm)DRILL

1982·1·28

Type D 6V ⊡

D6V(A1)

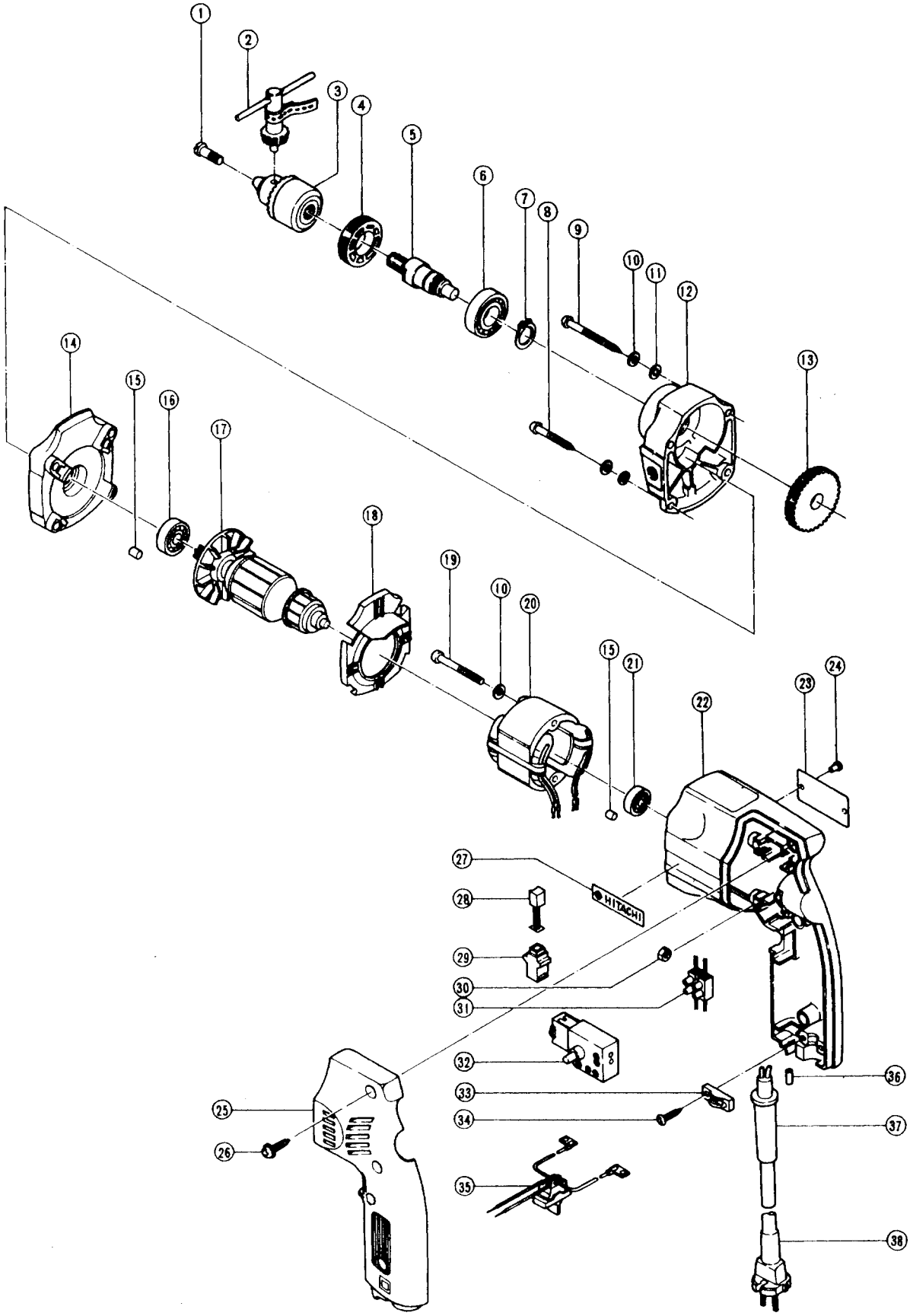

PARTS (Prices are subject to change without notice) D6V(A1)

Item No.	Code No.	Parts Name		Q'ty	Remarks			LIST PRICE US$
1	983414	Special Screw		1				2.70
2	980057	Chuck Wrench Ass'y		1				1.80
3	950282	Drill Chuck Ass'y	6.5TLR	1	includ. 2			12.10
4	930214	Bearing Cap		1				1.30
5	983412	Spindle		1				9.70
6	939442	Ball Bearing (6002ZZCM)		1				2.60
7	949153Z	C-Type Retaining Ring		1	for D15 shaft (10 pcs.)			1.00
8	954015	⊕Hd. Tapping Screw	M4 x 35	2				0.40
9	950515	⊕Hd. Tapping Screw	M4 x 50	2				0.40
10	949453Z	Spring Lock Washer		6	for M4 (10 pcs.)			0.40
11	949423Z	Washer		4	for M4 (10 pcs.)			0.40
12	983411	Gear Cover		1				3.50
13	983413	Gear		1				7.20
14	983410	Inner Cover Ass'y		1				4.50
15	931701	Bearing Lock		2				0.40
16	939396	Ball Bearing (608ZZC2)		1				2.30
17	983416C	Armature Ass'y	115V	1				25.30
18	950504	Fan Guide		1				0.60
19	949228Z	⊕Hd. Machine Screw	M4 x 40	2	(10 pcs.)			0.40
20	983415C	Stator Ass'y	115V	1				9.70
21	939401	Ball Bearing (626ZZC2)		1				2.20
22	950500	Housing		1				8.50
23	—	Name Plate		1				—
24	932642	Rivet	D2.5 x 2.8	2				0.40
25	950527	Handle Cover		1				4.50
26	982095	⊕Hd. Tapping Screw	M4 x 20	3				0.40
27	950565	HITACHI Label		1				0.40
28	999041	Carbon Brush		1				1.50
	999080Z	Carbon Brush		1	(Auto Stop Type)			4.40
29	955203	Brush Holder		2				1.20
30	949554Z	Nut		2	for M4 (10 pcs.)			0.40
31	983418Z	Pillar Terminal (B)		1				1.90
32	983417Z	Switch (D)		1				26.40
33	937631	Cord Clip		1				0.40
34	930446	⊕Hd. Tapping Screw	M4 x 16	2				0.40
35	982592Z	Reversing Switch Ass'y		1				12.70
36	981373	Tube (D)		2				0.40
37	930487	Cord Armor		1				1.10
38	500240Z	Cord	115V					6.10

OPTIONAL ACCESSORIES

Item No.	Code No.	Parts Name	Q'ty	Remarks			LIST PRICE US$
601	982569Z	Case Ass'y	1	includ. 602			24.10
602	945231	HITACHI Label	1				0.40