metabo HPT

LIST NO. E115

ELECTRIC TOOL PARTS LIST

DRILL

2016·10·21

Model D 10VH2

(E1)

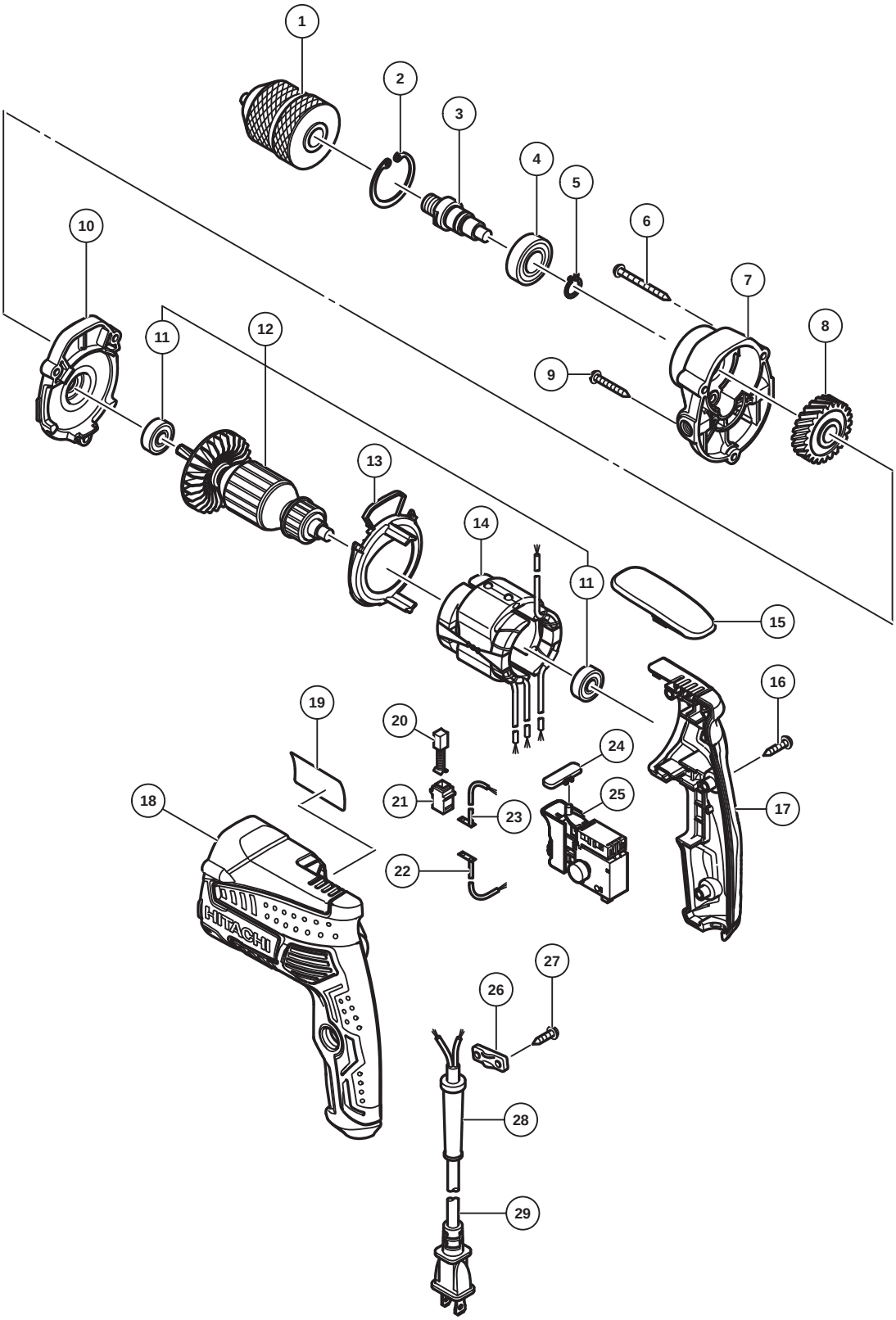

PARTS

D 10VH2

ITEM NO.	CODE NO.	DESCRIPTION	NO. USED	REMARKS	
1	370715	DRILL CHUCK 10VLRH-N (W/O CHUCK WRENCH)	1		
2	948001	RETAINING RING FOR D32 HOLE	1		
3	370712	SPINDLE (B)	1		
4	6002VV	BALL BEARING 6002VVCMPS2L	1		
5	939544	RETAINING RING FOR D15 SHAFT (10 PCS.)	1		
6	301815	TAPPING SCREW (W/FLANGE) D4 X 45 (BLACK)	2		
7	370710	GEAR COVER (A)	1		
8	370713	GEAR (A)	1		
9	305490	TAPPING SCREW (W/FLANGE) D4 X 30 (BLACK)	1		
10	370709	INNER COVER	1		
11	333945	BALL BEARING 608VV	2		
12	361050U	ARMATURE ASS'Y 120V	1	INCLUD.11	
13	370708	FAN GUIDE	1		
14	340959D	STATOR 120V	1		
15	370716	HOOK (A)	1		
16	301653	TAPPING SCREW (W/FLANGE) D4 X 20 (BLACK)	3		
17	370707	HANDLE COVER	1		
18	370706	HOUSING	1		
19		NAME PLATE	1		
20	999041	CARBON BRUSH (1 PAIR)	2		
21	955203	BRUSH HOLDER	2		
22	370705	INTERNAL WIRE (BROWN)	1		
23	370704	INTERNAL WIRE (BLUE)	1		
24	321628	PUSHING BUTTON	1		
25	370701	SWITCH	1		
26	937631	CORD CLIP	1		
27	984750	TAPPING SCREW (W/FLANGE) D4 X 16	2		
28	953327	CORD ARMOR D8.8	1		
29	500240Z	CORD	1		

OPTIONAL ACCESSORIES

ITEM NO.	CODE NO.	DESCRIPTION	NO. USED	REMARKS	
601	982593	HOOK	1		
602	981205	SIDE HANDLE FOR M10	1		

*ALTERNATIVE PARTS

Printed in Japan 10 - 16
(161021N)