CP797 Series
Impact Wrench

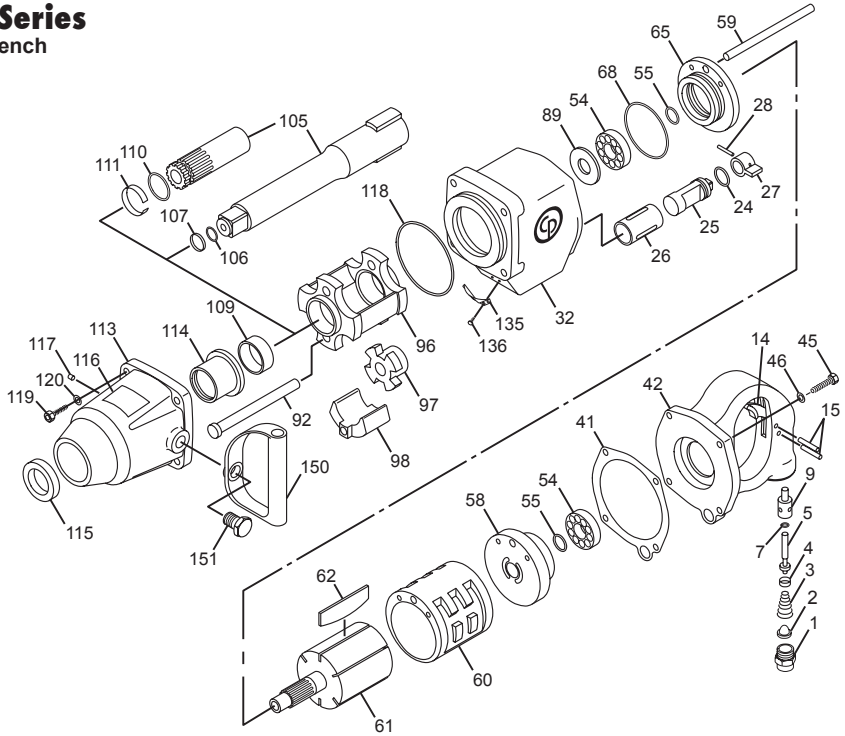

Index No.	Part No.	Description	Qty.
1	C092292	Inlet Bushing	1
2	C036909	Air Strainer	1
3	C077054	Throttle Spring	1
4	C106818	Retainer O-Ring	1
5	KF125405	Valve	1
7	A043001	O-Ring (-013)	1
9	KF125442	Bushing-Throttle Valve	1
10	CA131376	Decal-Oil Daily (Not Shown)	1
14	KF125384	Trigger	1
15	P001632	Pin-Roll (.188 x 1.125)	2
24	C083177	O-Ring (-210)	1
25	KF129398	Valve	1
26	CA116546	Bushing-Release Valve	1
27	C039399	Reverse Valve Lever	1
28	G071613	Pin-Roll (.125 x .75)	1
32	KF130009	Housing-Motor (Incl: index No. 26)	1
41	C063754	Handle-Gasket	1
42	KF125399	Handle-Pistol Grip (Incl: Index No. 9)	1
45	P070425	Cap-Screw (1/4-20 x 1)	4
46	S000271	Lockwasher (1/4)	4
54	C063836	Bearing-Ball	2
55	C089991	Grease Seal	2
58	CA116243	Plate-Upper End	1
59	KF125390	Pin-Liner Dowel	1
60	KF125401	Liner	1
61	CA116249	Rotor 12T	1
62	KF138224	Blade-Set	1
65	CA116245	Plate-Lower End	1
68	P083094	O-Ring (-230)	1
89	KF125419	Spacer-Bearing	1
92	CA048066	Pin-Clutch Dog	2
96	KF125418	Cage	1

Index No.	Part No.	Description	Qty.
97	KF125417	Cam-Dog	1
98	CA116247	Dog	2
105	KF127222	Anvil (1 in. Sq. Dr.)(Incl: Index Nos. 106 & 107)	1
	CA116251	Anvil (1 in. Sq. Dr.)(6 in. Extension) (Incl: Index Nos. 106 & 107)	1
	KF130164	Anvil (#5 Spline Dr.)(Incl: Index Nos. 110 & 111)	1
	KF130165	Anvil (#5 Spline Dr.)(6 in. Extension) (Incl: Index Nos. 110 & 111)	1
106	H082651	O-Ring (1 in. Sq. Dr.)	1
107	CA094791	Ring-Friction (1 in Sq. Dr.)	1
109	CA116241	Bushing	1
110	C084172	O-Ring (#5 Spline Dr.)	1
111	CA050617	Ring-Friction (#5 Spline Dr.)	1
113	CA117390	Housing-Clutch (Incl: Index Nos. 114, 115 & 116)	1
114	CA122265	Bushing-Clutch Housing	1
115	CA088508	Grease Seal	1
116	CA155779	Decal-Safety Warning	1
117	C054897	Pipe Plug	1
118	CA116253	O-Ring (242)	1
119	S062777	Screw (5/16-18 x 1 1/4)	4
120	C011070	Lockwasher (5/16)	4
135	KF129684	Plate	1
136	KF129065	Screw-Self Tapping	4
150	KF125403	Handle-Dead	1
151	KF125404	Bolt (3/4-16 x 1 3/8)	1

Tune-Up Kit
CA131501 (Incl: 7, 24, 41, 55, 62, 68, 106, 107, 110, 111, 115, 118)
Clutch Housing Kit
CA144478 (Incl: 92, 113, 118)