Chicago Pneumatic

CP0200B25L / CP0200B25L-2F

Sand Rammer

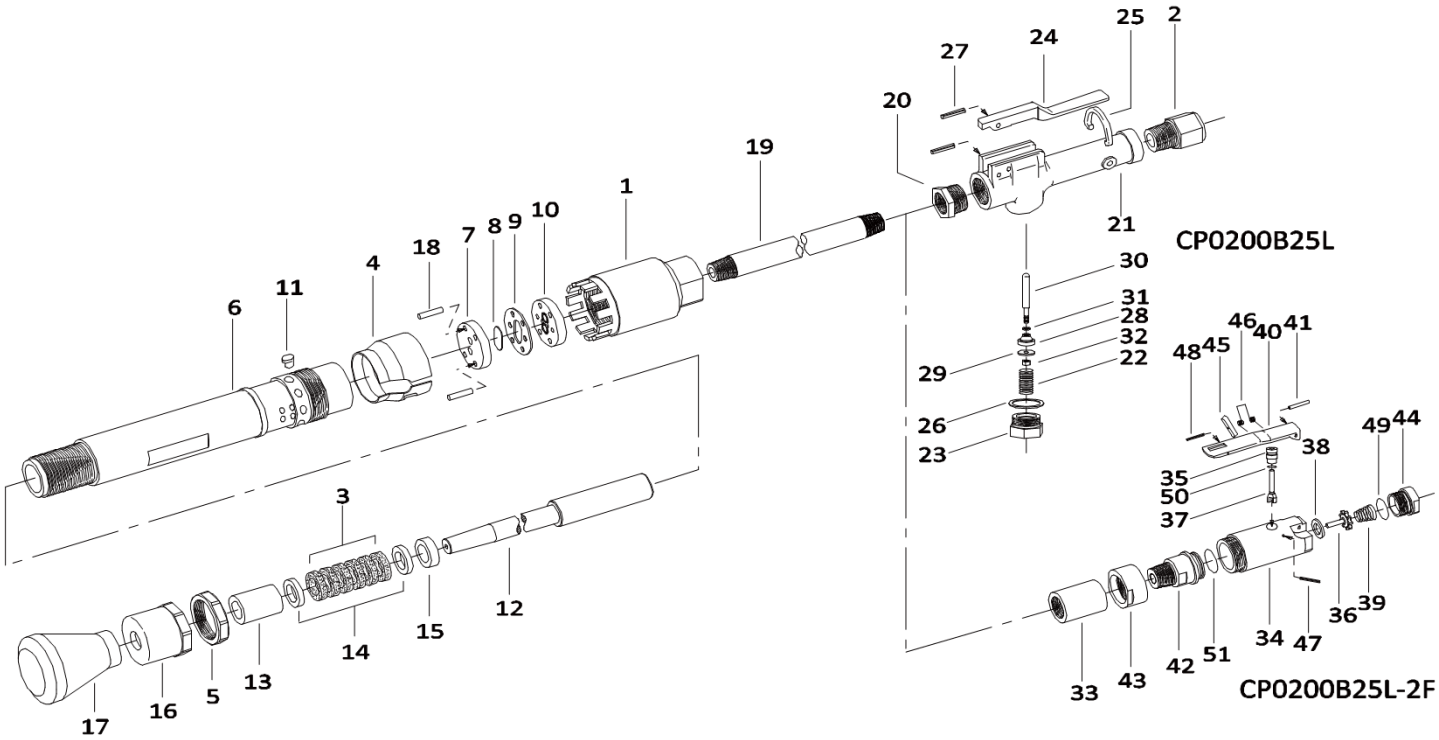

Index No.	Part No.	Description	Qty.
1	5412055485	Cap	1
2	5412054493	Inlet Bushing	1
3	5412055488	Felt Ring	6
4	5412055489	Exhaust Cover	1
5	5412055490	Lock Nut	1
6	5412102973	Cylinder CP0200B25L	1
6	5412102974	Cylinder CP0200B25L-2F	1
11	5412055496	Locking Clutch	1
12	5412055497	Piston	1
16	5412055501	Grand	1
17	5412055535	Rubber Butt	1
19	5412055487	Pipe	1
20	5412055502	Socket Joint	1
21	5412055477	Throttle Valve Body	1
33	5412054336	Socket Joint	1
34	5412058775	Throttle Valve Body	1
42	5412058781	Throttle Valve Stem	1
43	5412058783	Throttle Valve Stem Nut	1
44	5412076996	Inlet Joint <NPT>	1
A	**8940170216**	**Valve Kit**	
7		Valve Sheet	1
8		Valve	1
9		Valve Case	1
10		Valve Cover	1
18		Pin	2
B	**8940170217**	**Packing Kit**	
13		Piston Bushing	1
14		Leather Packing	2
15		Packing Sheet	1
C	**8940170221**	**Throttle B25L Kit**	
22		Throttle Valve Spring	1
23		Throttle Valve Cover	1
26		Packing	1
28		Throttle Valve	1
29		Throttle Valve Collar	1

Index No.	Part No.	Description	Qty.
30		Throttle Valve Rod	1
31		Plain Washer	1
32		Nut	1
D	**8940170222**	**Lever B25L Kit**	
24		Throttle Valve Lever	1
25		Stop Ring	1
27		Spring Pin	2
E	**8940170202**	**Throttle Kit 2F Model**	
35		Throttle Valve Bushing	1
37		Throttle Valve Rod	1
47		Spring Pin	1
50		"O" Ring	1
F	**8940170203**	**Throttle Valve Kit 2F Model**	
36		Throttle Valve	1
38		Throttle Valve Sheet	1
39		Throttle Valve Spring	1
49		"O" Ring	1
G	**8940170204**	**Safety Lever Kit 2F Model**	
40		Throttle Valve Lever	1
41		Throttle Valve Lever Pin	1
45		Lock Key	1
46		Lock Spring	1
48		Spring Pin	1
H	**8940170210**	**Tune-up Kit**	
49		"O" Ring	1
50		"O" Ring	1
51		"O" Ring	1
I	**8940170223**	**Small Part Kit B25L**	
	include 8, 18, 27		
J	**8940170279**	**Small Part Kit B25L-2F**	
	include 8, 18, 41, 46, 47, 48		

	6159948780	Safety instructions	1
	2050558133	Operator's manual	1
	5412060277	Warning Label	1

Spare parts without part number are not sold separately - High wear parts underlined

Contact us at www.cp.com