CRAFTSMAN
CMPNC18K

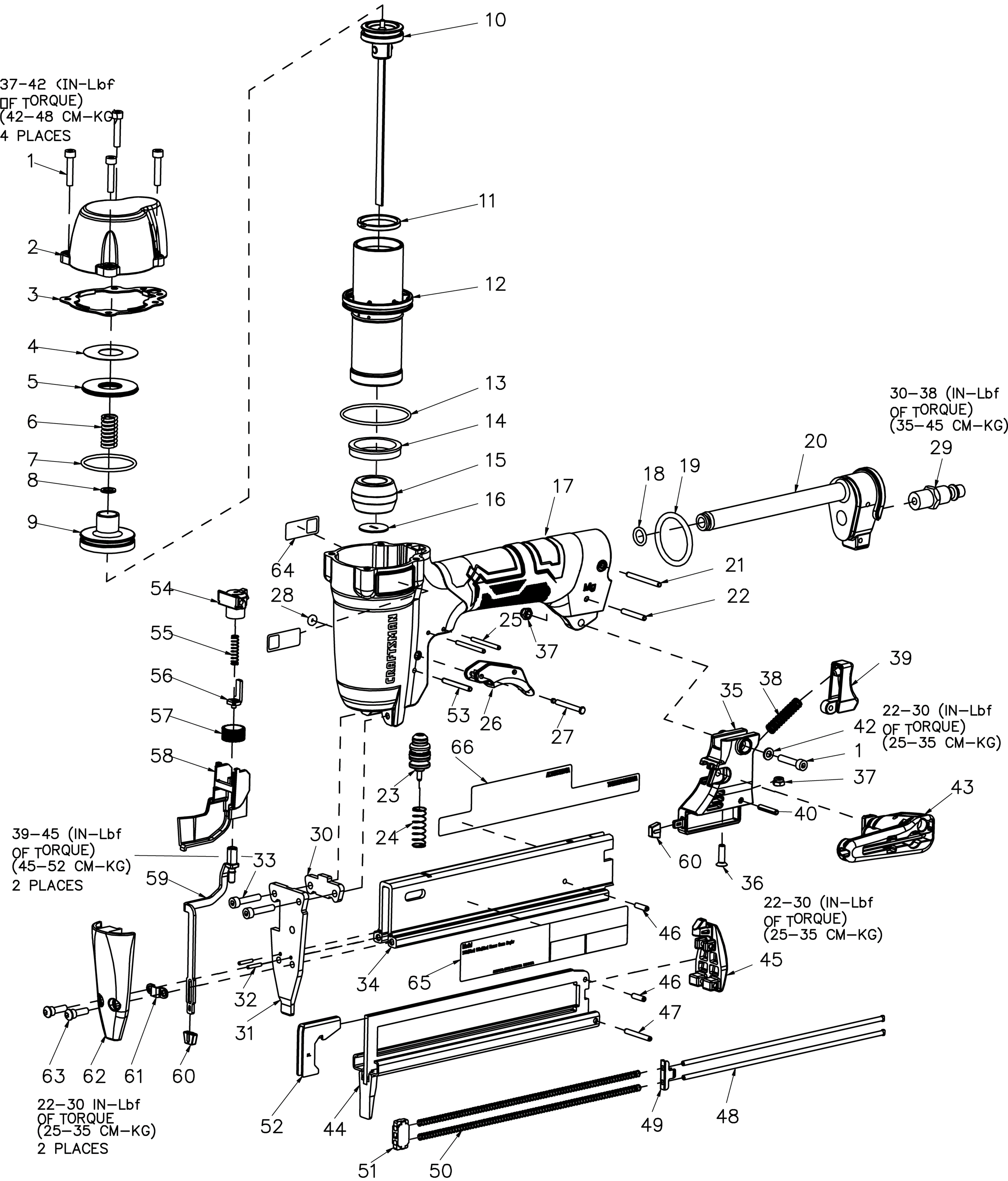

IP1523-1RA 09/18
To be used with parts list IP1523-2 and operation and maintenance manual N638261.