CRAFTSMAN
CMPFN16K

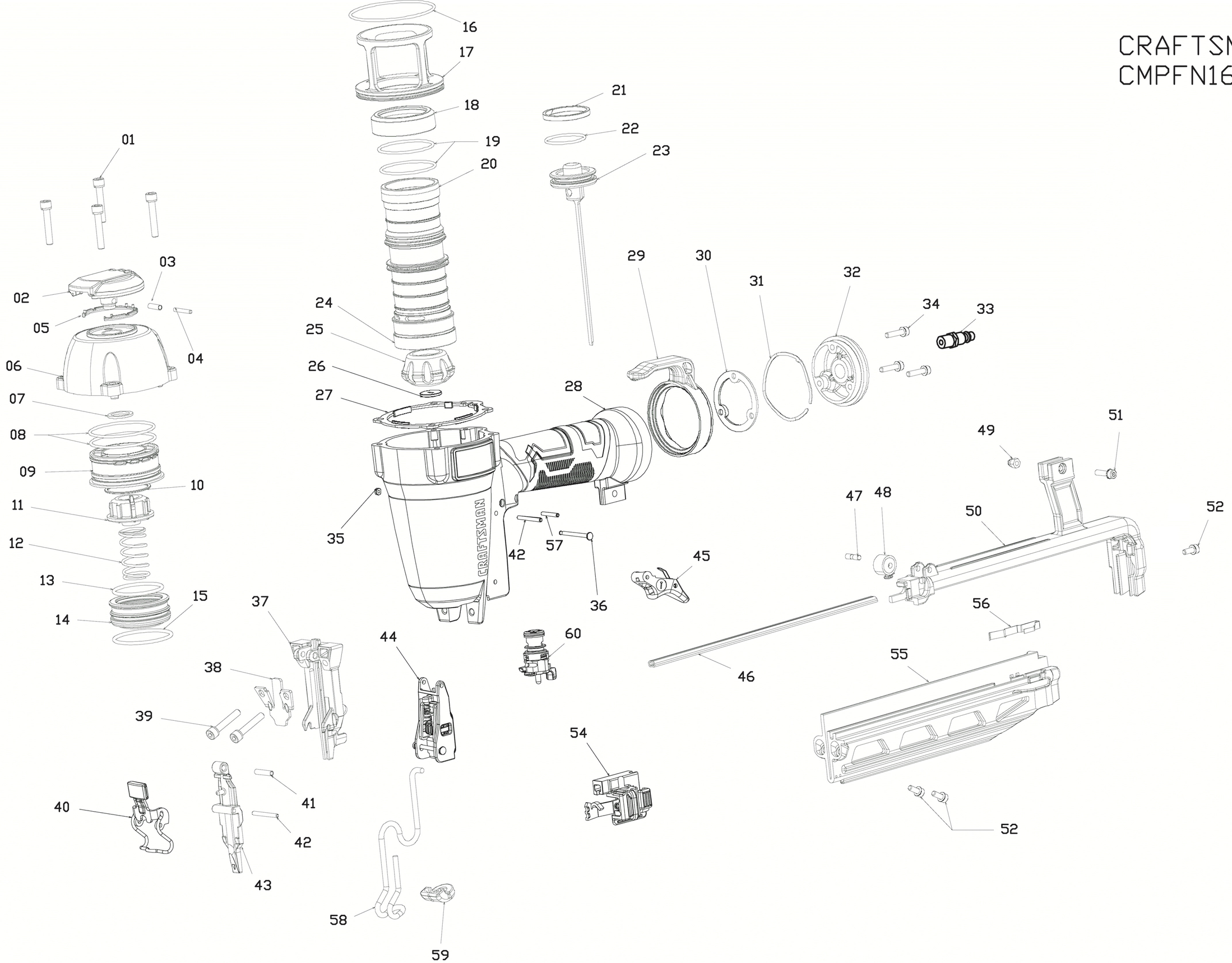

IP1525-1RA 12/18

To be used with parts list IP1525-2 and operation and maintenance manual N638262.