CRAFTSMAN
CMPBN18K

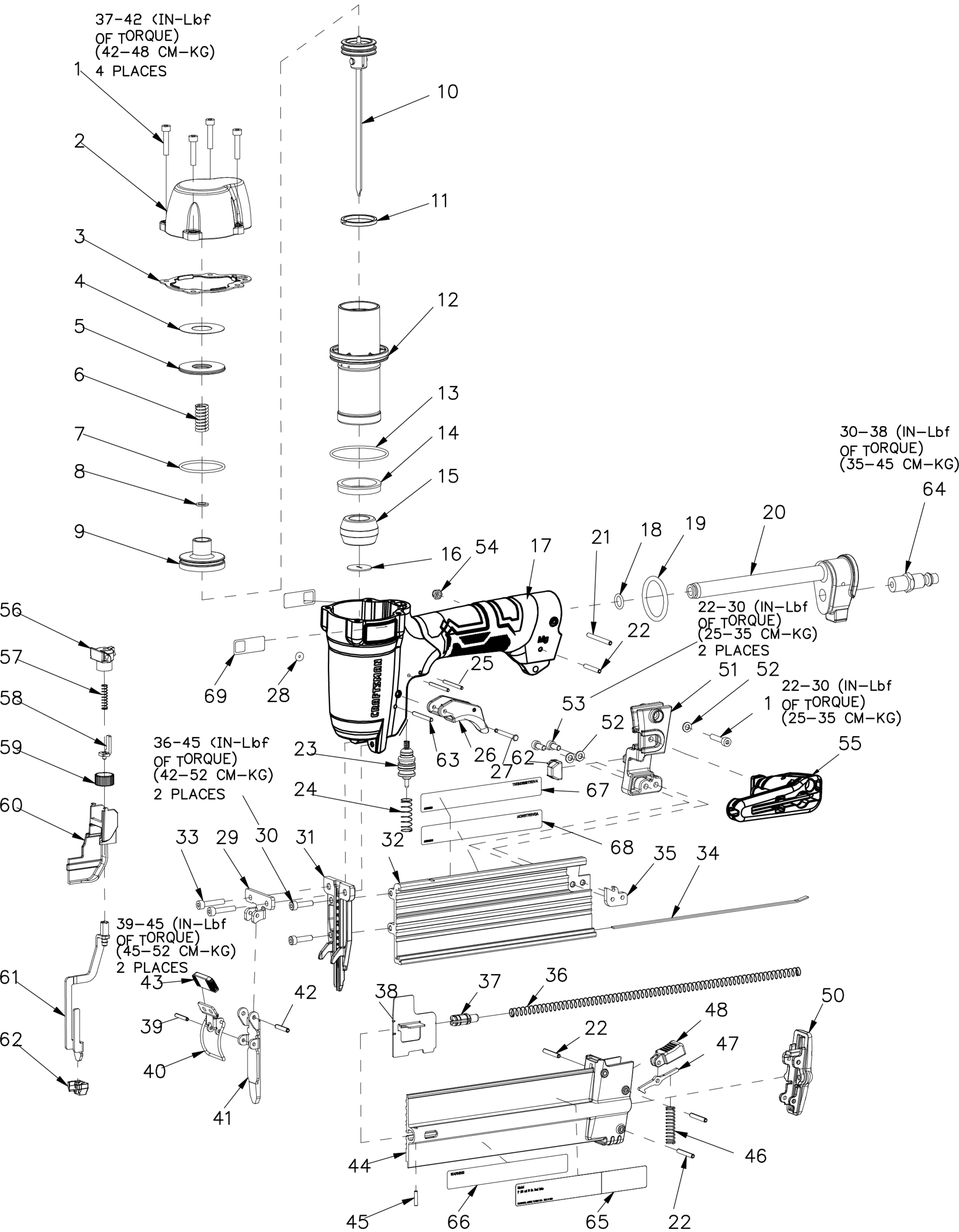

IP1524-1RA 12/18
To be used with parts list IP1524-2 and operation and maintenance manual N638260.