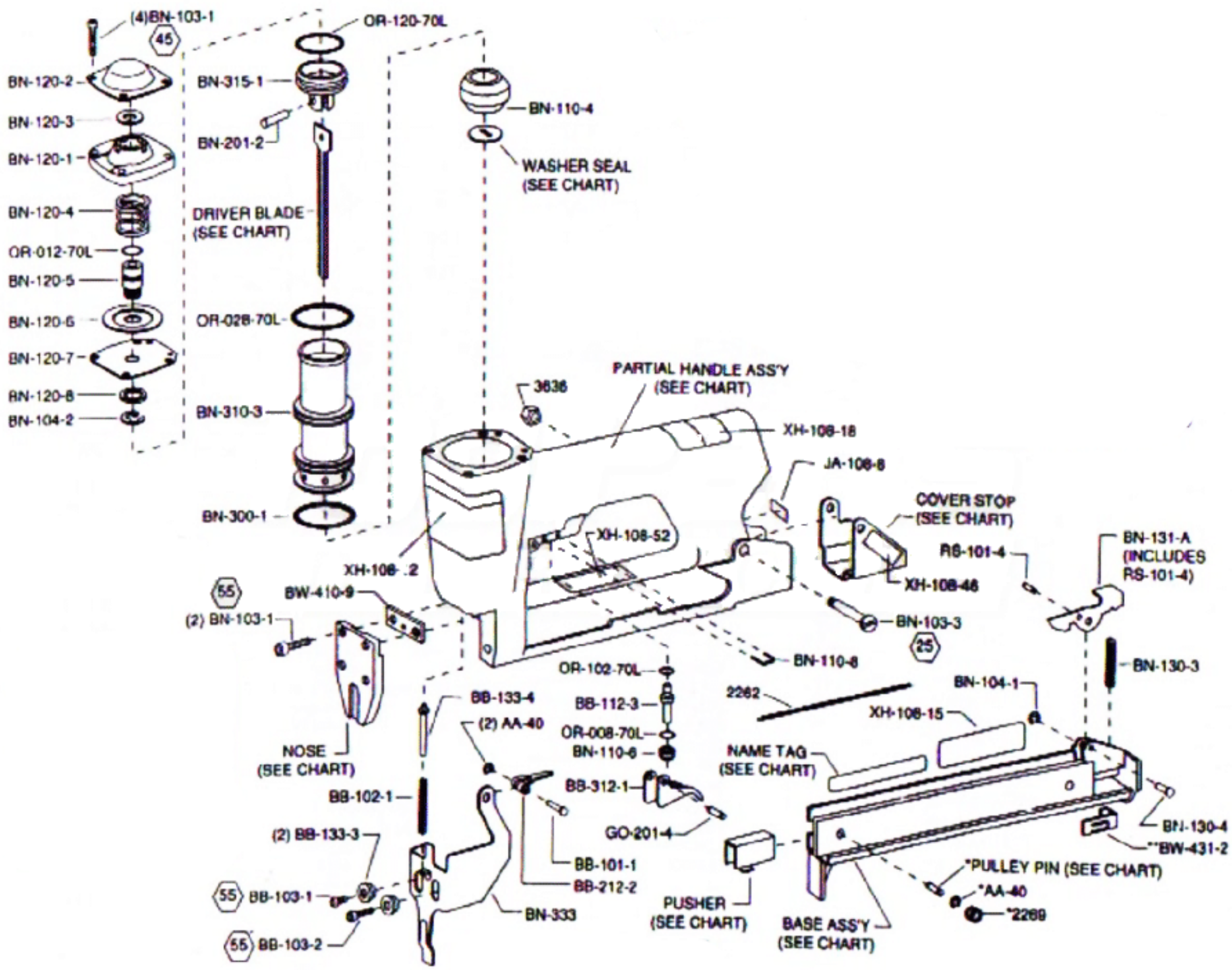
(4)BN-103-1
45
BN-120-2
BN-120-3
BN-120-1
BN-120-4
OR-012-70L
BN-120-5
BN-120-6
BN-120-7
BN-120-8
BN-104-2
OR-120-70L
BN-315-1
BN-201-2
DRIVER BLADE
(SEE CHART)
OR-028-70L
BN-310-3
BN-300-1
BN-110-4
WASHER SEAL
(SEE CHART)
3636
PARTIAL HANDLE ASS'Y
(SEE CHART)
XH-108-18
JA-108-8
COVER STOP
(SEE CHART)
XH-108-52
XH-108-46
XH-108-2
BN-131-A
(INCLUDES
RS-101-4)
RS-101-4
55
BW-410-9
(2) BN-103-1
BN-103-3
25
BN-110-6
BN-130-3
OR-102-70L
BB-133-4
BB-112-3
2262
BN-104-1
XH-108-15
(2) AA-40
OR-008-70L
BN-110-6
NOSE
(SEE CHART)
NAME TAG
(SEE CHART)
BB-312-1
BB-102-1
GO-201-4
BN-130-4
**BW-431-2
(2) BB-133-3
BB-101-1
BB-212-2
*PULLEY PIN (SEE CHART)
*AA-40
*2269
55 BB-103-1
BN-333
PUSHER
(SEE CHART)
BASE ASS'Y
(SEE CHART)
55 BB-103-2