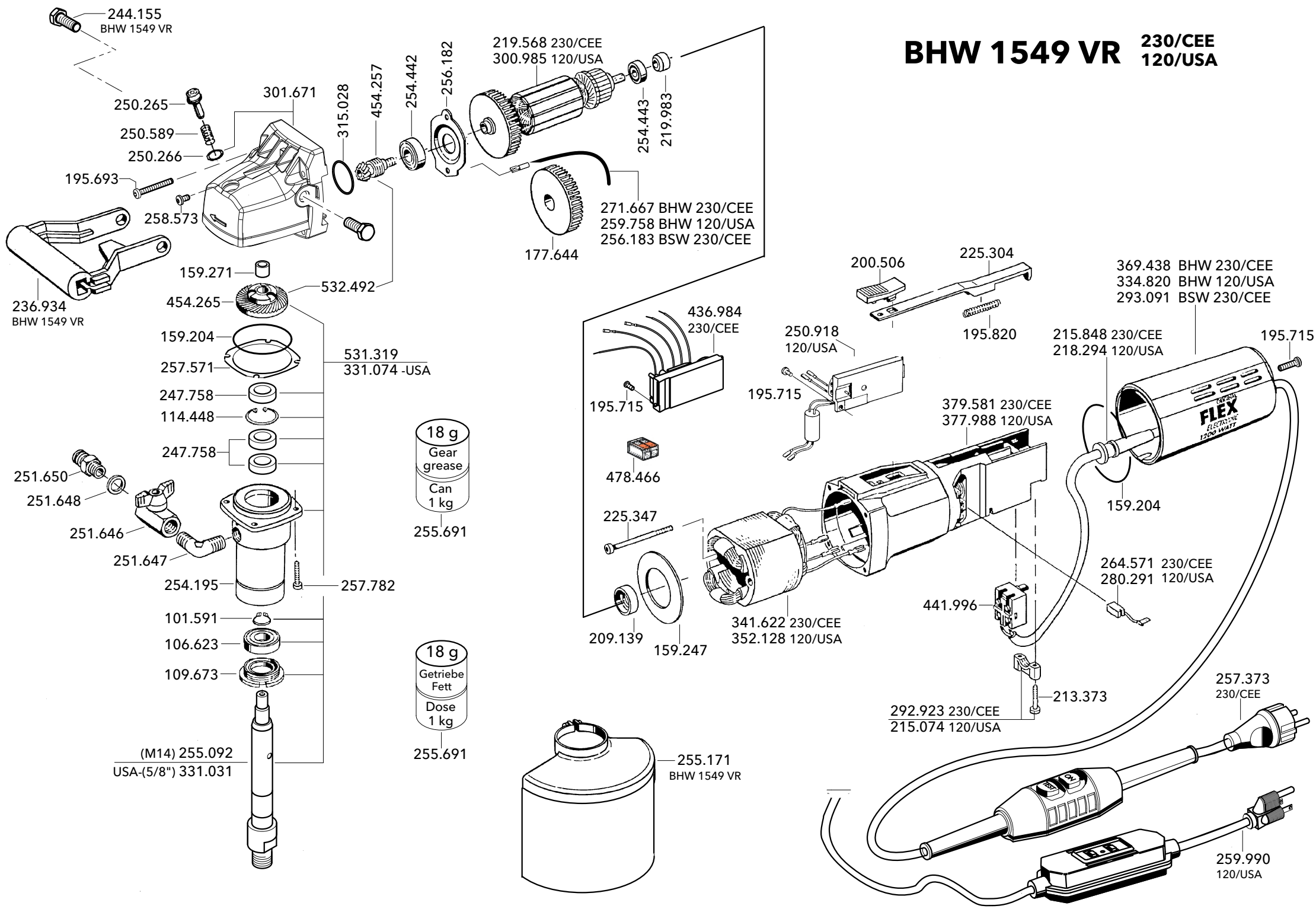BHW 1549 VR 230/CEE 120/USA