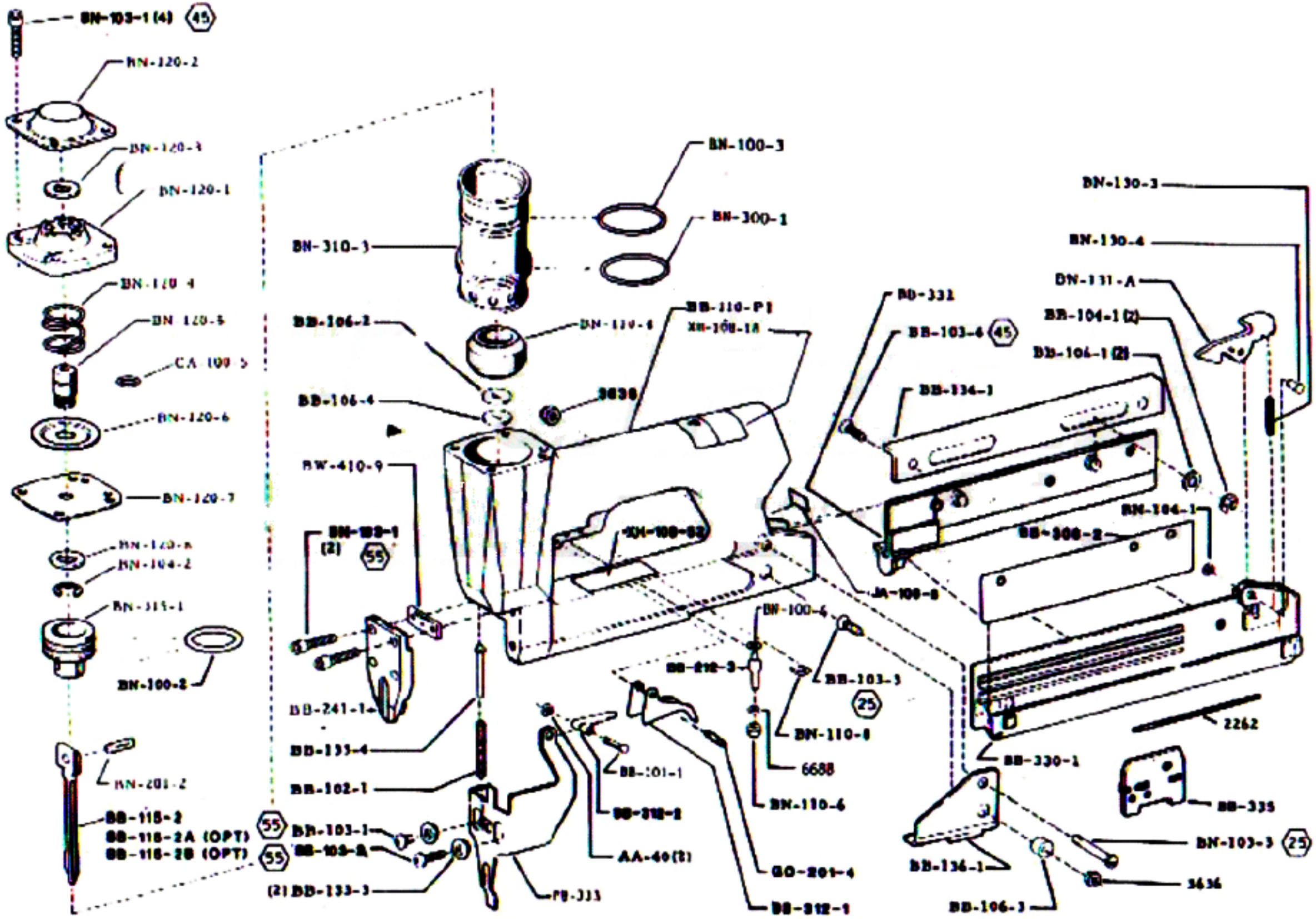
BN-103-1 (4) 45
BN-120-2
BN-120-3
BN-120-1
BN-120-4
BN-120-5
CA-100-5
BN-120-6
BN-120-7
BN-104-2
BN-315-1
BN-100-2
BN-201-2
BB-115-2
BB-115-2A (OPT) 55
BB-115-2B (OPT) 55
BN-100-3
BN-300-1
BN-310-3
BB-106-2
BN-110-4
BB-106-4
3630
BW-410-9
BN-102-1 (2) 55
BB-241-1
BB-133-4
BB-102-1
BB-103-1
BB-103-2
(2) BB-133-3
BB-110-P1
XH-108-18
XH-108-82
BB-331
BB-103-4 45
BB-134-1
BN-130-3
BN-130-4
BN-131-A
BB-104-1 (2)
BB-104-1 (2)
BN-104-1
BB-300-2
JA-108-8
BN-100-4
BB-212-3
BB-103-3 25
BN-110-8
6688
BN-110-6
BB-201-1
BB-212-2
AA-40 (2)
GO-201-4
BB-212-1
PB-333
2262
BB-330-1
BB-335
BN-103-3 25
3636
BB-136-1
BB-106-3