BULLETIN NO.
55-42-5509

SERVICE PARTS LIST

SPECIFY CATALOG NO. AND SERIAL NO. WHEN ORDERING PARTS			REVISED BULLETIN	DATE
POSITIVE CLUTCH REV. SCREWDRIVER			55-42-5508	Apr. '94
CATALOG NO. 6798-4	STARTING SERIAL NO.	450A	WIRING INSTRUCTION 58-03-0023	

EXAMPLE:
00 | 0
Component Parts (Small #)
Are Included When Ordering
The Assembly (Large #).

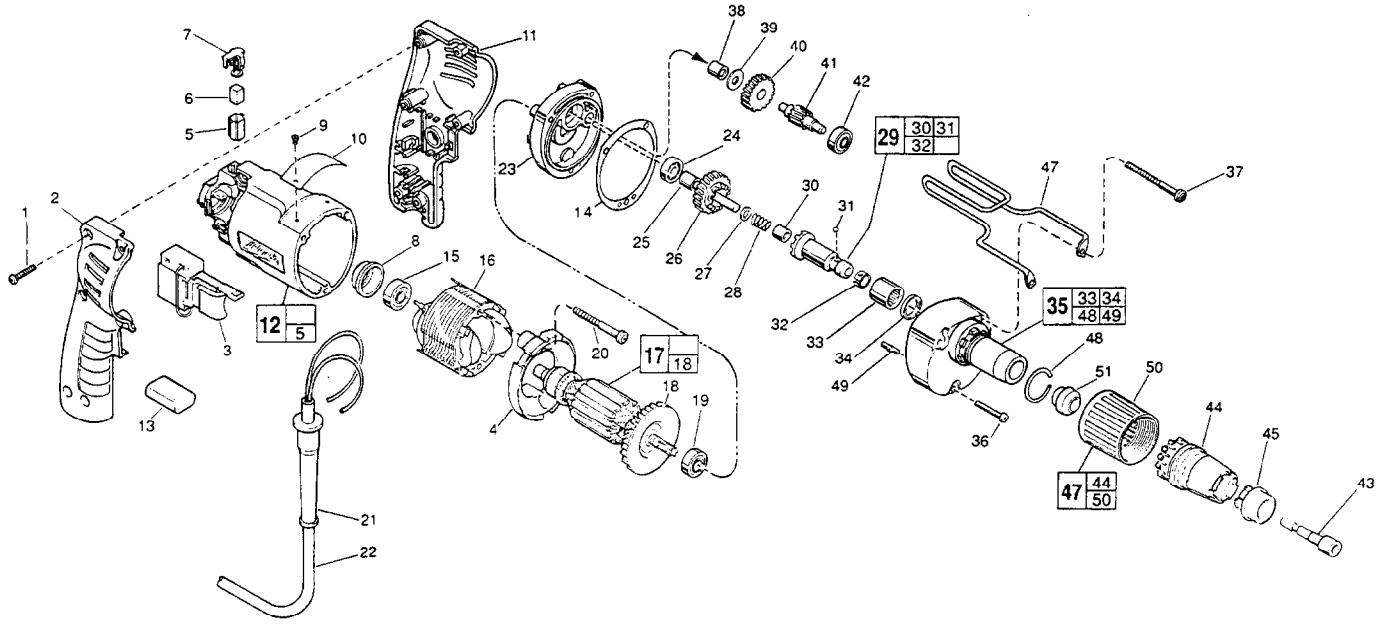

FIG.	PART NO.	DESCRIPTION OF PART	NO. REQ.
1	06-82-7284	8-16 x 3/4" Pan Hd. Slt. Plast. T-20	(6)
2	31-44-1745	Right Handle Half	(1)
3	23-66-2075	Speed Control Switch	(1)
★ 4	42-14-0380	Baffle	(1)
5	22-20-0830	Brush Tube	(2)
6	22-16-0375	Carbon Brush	(2)
7	23-52-1570	Brush Spring Assembly	(2)
8	22-72-0100	Bearing Cup	(1)
9	06-85-0200	Nameplate Screw	(2)
10	12-99-0570	Service Nameplate	(1)
11	31-44-1740	Left Handle Half	(1)
12	14-38-0590	Motor Housing Assembly	(1)
★ 13	14-20-0530	Capacitor Assembly	(1)
★ 14	43-44-0925	Gasket	(1)
15	02-04-0645	Ball Bearing	(1)
16	18-12-0150	Field	(1)
★ 17	16-14-0690	Armature	(1)
★ 18	22-84-0880	Fan Assembly	(1)
★ 19	02-04-0851	Ball Bearing	(1)
★ 20	06-82-7203	7-18 x 2-1/8" Pan Hd. Slt. Plast. T-20	(2)
21	44-76-0210	Cord Protector	(1)
22	22-64-4480	Cord Set	(1)
★ 23	28-28-1961	Diaphragm	(1)
24	02-04-0645	Ball Bearing	(1)
25	45-36-1280	Spacer	(1)
26	32-10-4045	Clutch Gear Assembly	(1)
27	45-88-0712	Thrust Washer	(1)
28	40-50-6600	Separator Spring	(1)
★ 29	42-66-0775	Clutch Chuck Assembly	(1)
30	02-50-2400	Needle Bearing	(1)
31	02-02-0130	Steel Ball	(1)
32	40-50-0510	Bit Retaining Spring	(1)
33	02-50-4220	Needle Roller Bearing	(1)
★ 34	45-06-0570	Oil Seal	(1)

FIG.	PART NO.	DESCRIPTION OF PART	NO. REQ.
★ 35	14-30-0740	Gear Case Assembly	(1)
36	06-82-7344	7-18 x 1-1/2" Pan Hd. Slt. Plast. T-20	(1)
37	06-82-7464	7-18 x 2-3/4" Pan Hd. Slt. Plast. T-20	(2)
38	02-50-2410	Needle Bearing	(1)
39	45-88-7990	Thrust Washer	(1)
40	32-40-1612	Intermediate Gear	(1)
41	36-66-4101	Intermediate Pinion Shaft	(1)
★ 42	02-04-0645	Ball Bearing	(1)
43	49-66-3016	5/16" Hex Socket	(1)
★ 44	31-51-0100	Locator	(1)
★ 45	49-26-0400	1/4" Tek Guide	(1)
★	49-26-0405	5/16" Tek Guide	(1)
★	49-26-0410	3/8" Tek Guide	(1)
46	42-70-5080	Belt Clip	(1)
★ 47	49-26-1080	Locator Assembly	(1)
★ 48	44-90-0401	Locator Ring	(1)
49	06-65-0825	1/8 x 1/2 Groove Pin 5	(1)
★ 50	31-58-0510	Locator Sleeve	(1)
★ 51	30-37-0045	Guide	(1)

FIG.	LUBRICATION
35	1-1/2 Oz. Type "E" Grease, No. 49-08-4122. Place Near Intermediate Shaft Ball Bearing In Gear Case.

FIG.	NOTES
1	Torque to 18-22 In./Lbs.
20,36,37	Torque to 15-20 In./Lbs.
8	Place in motor housing before inserting armature.
30,33,38	Press only on end with manufacturer ID.
38	Press flush to casting surface.
33	Press 13/64" from cast surface.
34	Spring side towards rear of gear case.
15,42,24	Seal towards armature.
30	Press 11/64" from clutch face.

MILWAUKEE ELECTRIC TOOL CORPORATION
13135 W. LISBON RD., BROOKFIELD, WI 53005