SERVICE PARTS LIST

BULLETIN NO. 54-42-5509

SPECIFY CATALOG NO. AND SERIAL NO. WHEN ORDERING PARTS			REVISED BULLETIN	DATE
POSITIVE CLUTCH REV. SCREWDRIVER			54-42-5508	May '93
CATALOG NO. 6798-1	STARTING SERIAL NO.	**450-305000 or 450A**	WIRING INSTRUCTION **58-01-0023**	

EXAMPLE:
00 | 0 — Component Parts (Small #) Are Included When Ordering The Assembly (Large #).

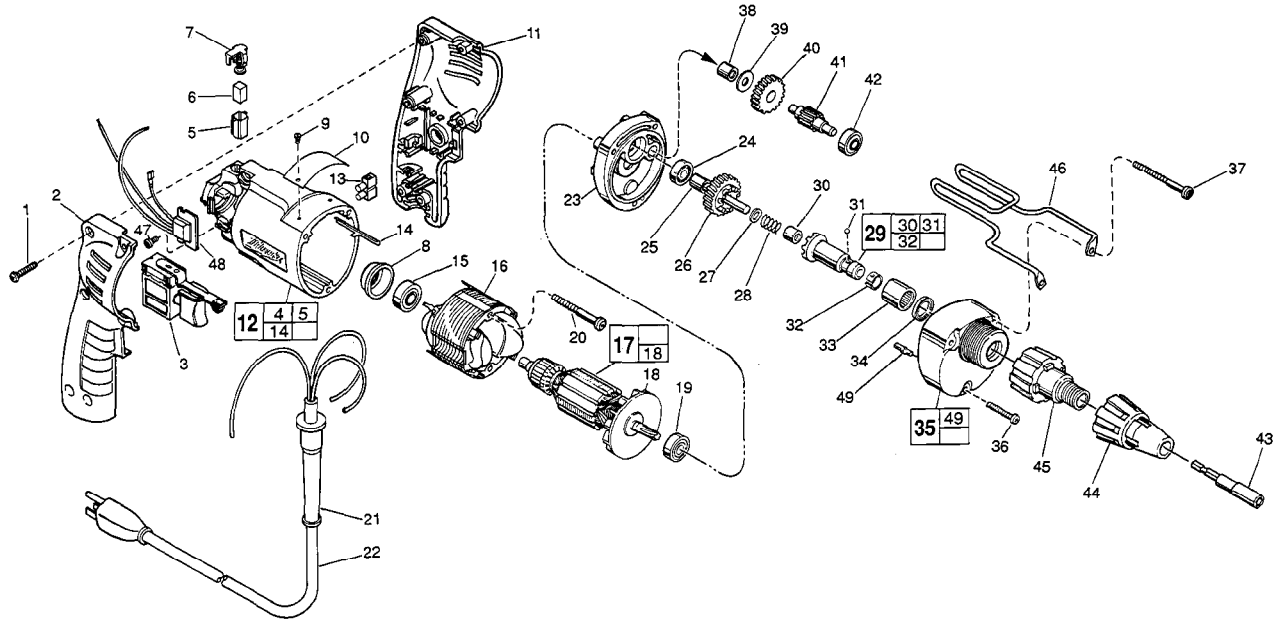

FIG.	PART NO.	DESCRIPTION OF PART	NO. REQ.
1	06-82-7284	8-16 x 3/4" Pan Hd. Slt. Plast. T-20	(6)
★ 2	31-44-1745	Right Handle Half	(1)
★ 3	23-66-2145	Speed Control Switch	(1)
4	23-94-6225	Ground Wire Assembly (Not Shown)	(1)
★ 5	22-20-0830	Brush Tube	(2)
6	22-16-0275	Carbon Brush	(2)
7	23-52-1560	Brush Spring Assembly	(2)
8	22-72-0100	Bearing Cup	(1)
9	06-85-0200	Nameplate Screw	(2)
10	12-99-0850	Service Nameplate	(1)
★ 11	31-44-1740	Left Handle Half	(1)
★ 12	14-38-0600	Motor Housing Assembly	(1)
13	22-56-0456	Terminal Block	(1)
14	44-60-0530	Ground Pin	(1)
15	02-04-0645	Ball Bearing	(1)
16	18-11-0150	120 Volt Field	(1)
17	16-10-0380	120 Volt Armature	(1)
18	22-84-0830	Fan Assembly	(1)
19	02-04-0848	Ball Bearing	(1)
20	06-82-7393	7-18 x 2" Pan Hd. Slt. Plast. T-20	(2)
21	44-76-0210	Cord Protector	(1)
★ 22	22-64-1120	Cord Set	(1)
23	28-28-1960	Diaphragm	(1)
24	02-04-0645	Ball Bearing	(1)
25	45-36-1280	Spacer	(1)
26	32-10-4045	Clutch Gear Assembly	(1)
27	45-88-0712	Thrust Washer	(1)
28	40-50-6600	Separator Spring	(1)
29	42-66-0766	Clutch Chuck Assembly	(1)
30	02-50-2400	Needle Bearing	(1)
31	02-02-0130	Steel Ball	(1)
32	40-50-0510	Bit Retaining Spring	(1)
33	02-50-4220	Needle Roller Bearing	(1)
34	45-06-0106	Oil Seal	(1)

FIG.	PART NO.	DESCRIPTION OF PART	NO. REQ.
35	14-30-0600	Gear Case Assembly	(1)
36	06-82-7344	7-18 x 1-1/2" Pan Hd. Slt. Plast. T-20	(1)
★37	06-82-7464	7-18 x 2-3/4" Pan Hd. Slt. Plast. T-20	(2)
38	02-50-2410	Needle Bearing	(1)
39	45-88-7990	Thrust Washer	(1)
40	32-40-1612	Intermediate Gear	(1)
41	36-66-4101	Intermediate Pinion Shaft	(1)
42	02-04-0640	Ball Bearing	(1)
43	49-66-3016	5/16" Hex Socket	(1)
44	49-26-0250	Locator 1/4" Hex Socket	(1)
	49-26-0312	Locator 5/16" Hex Socket	(1)
	49-26-0375	Locator 3/8" Hex Socket	(1)
45	48-32-2500	Bit Housing	(1)
46	42-70-5080	Belt Clip	(1)
47	06-82-7212	4-20 x 1/4" Pan Hd. Slt. Plast. T-10	(1)
★48	14-20-0650	Remote Electronic Assembly	(1)
49	06-65-0825	1/8 x 1/2 Groove Pin 5	(1)

FIG.	LUBRICATION
35	1-1/2 Oz. Type "E" Grease, No. 49-08-4122. Place Near Intermediate Shaft Ball Bearing In Gear Case.

FIG.	NOTES
1	Torque to 18-22 In./Lbs.
20,36,37	Torque to 15-20 In./Lbs.
47	Torque to 3-5 In./Lbs.
8	Place in motor housing before inserting armature.
30,33	Press only on end with manufacturer ID.
33,38	Press flush to casting surface.
34	Lip towards front of gear case.
15,19,24	Seal towards armature.
30	Press 11/64" from clutch face.

MILWAUKEE ELECTRIC TOOL CORPORATIO
13135 W. LISBON RD., BROOKFIELD, WI 5300