SERVICE PARTS LIST

BULLETIN NO.
54-42-5507

SPECIFY CATALOG NO. AND SERIAL NO. WHEN ORDERING PARTS		REVISED BULLETIN	DATE
POSITIVE CLUTCH REV. SCREWDRIVER		54-42-5506	April '88
CATALOG NO. 6798-1	STARTING SERIAL NO. 450-224000	WIRING INSTRUCTION 58-01-0018	

EXAMPLE:
00 0 Component Parts (Small #) Are Included When Ordering The Assembly (Large #).

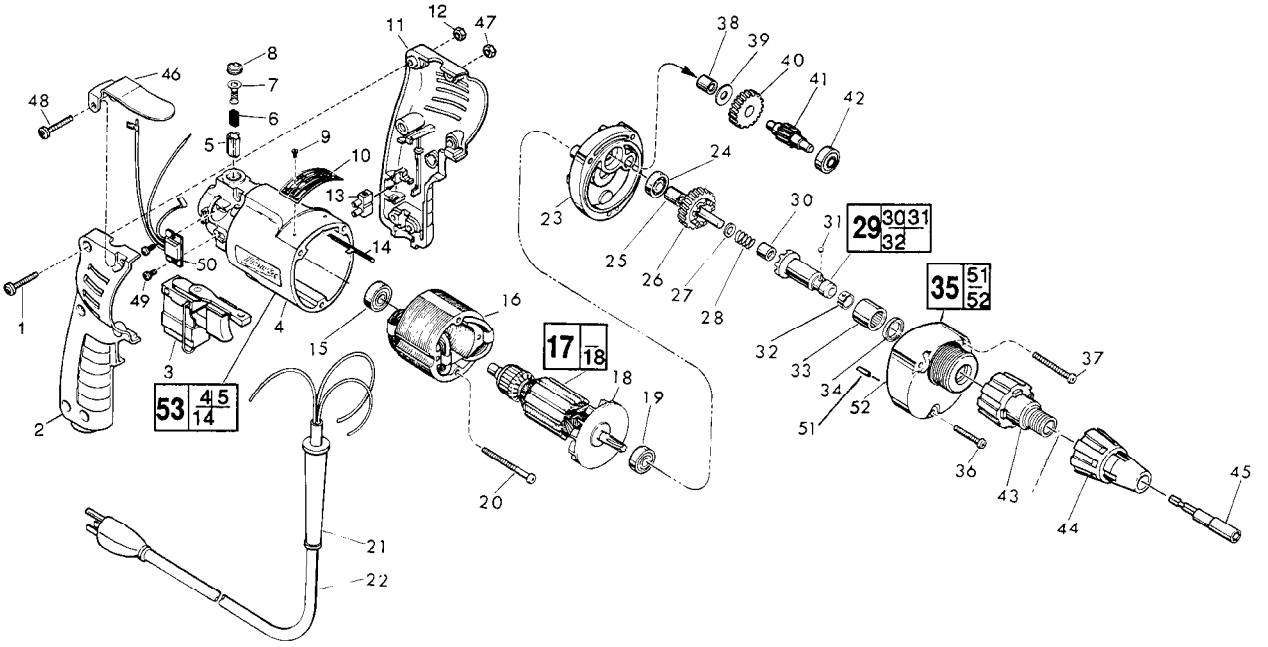

FIG.	PART NO.	DESCRIPTION	NO. REQ.
★ 1	06-82-2361	8-32 x 15/16" Pan Hd. Slt. Torx Screw	(5)
2	31-44-1130	Right Handle Half	(1)
★ 3	23-66-1655	Speed Control Switch	(1)
★ 4	31-50-0346	Motor Housing	(1)
5	22-20-0530	Brush Tube	(2)
6	22-16-0275	Carbon Brush	(2)
7	23-52-0210	Brush Spring Assembly	(2)
8	23-44-0120	Brush Retaining Screw	(2)
9	06-85-0200	Nameplate Screw	(2)
10	12-99-0445	Nameplate Blank	(1)
11	31-44-1140	Left Handle Half	(1)
12	06-55-0835	8-32 Hex Nut	(5)
★ 13	22-56-0456	Terminal Block	(1)
14	44-60-0530	Ground Pin	(1)
15	02-04-0645	Ball Bearing	(1)
16	18-10-0130	120 Volt Field	(1)
17	16-10-0591	120 Volt Armature	(1)
18	22-84-0440	Fan Assembly	(1)
19	02-04-0848	Ball Bearing	(1)
★ 20	06-82-7393	7-18x2" Pan Hd. Slt. Plast. Torx Screw	(2)
21	44-76-0130	Cord Protector	(1)
22	22-64-1120	Cord Set	(1)
23	28-28-1800	Diaphragm	(1)
24	02-04-0645	Ball Bearing	(1)
25	45-36-1280	Spacer	(1)
26	32-10-4045	Clutch Gear Assembly	(1)
27	45-88-0712	Thrust Washer	(1)
28	40-50-6600	Separator Spring	(1)
29	42-66-0766	Clutch Chuck Assembly	(1)
30	02-50-2400	Needle Bearing	(1)
31	02-02-0130	Steel Ball	(1)
32	40-50-0510	Bit Retaining Spring	(1)
33	02-50-4220	Needle Roller Bearing	(1)
34	45-06-0106	Oil Seal	(1)
35	14-30-0600	Gear Case Assembly	(1)
★ 36	06-82-7344	7-18 x 1-1/2" Pan Hd. Slt. Plast. Torx Screw	(1)
★ 37	06-82-7440	7-18 x 2-1/2" Pan Hd. Slt. Plast. Torx Screw	(2)
38	02-50-2410	Needle Bearing	(1)
39	45-88-7990	Thrust Washer	(1)
40	32-40-1612	Intermediate Gear	(1)
41	36-66-4101	Intermediate Pinion Shaft	(1)
42	02-04-0640	Ball Bearing	(1)
43	48-32-2500	Bit Housing	(1)
44	49-26-0250	Locator Assembly - 1/4" Hex Socket	(1)
	49-26-0312	Locator Assembly - 5/16" Hex Socket	(1)
	49-26-0375	Locator Assembly - 3/8" Hex Socket	(1)
45	49-66-3016	5/16" Hex Socket	(1)
★ 46	42-70-0280	Belt Clip	(1)
★ 47	06-55-0825	8-32 Hex Nut	(1)
★ 48	06-82-2363	8-32x1" Pan Hd. Slt. Torx Screw	(1)
★ 49	06-82-7212	4-20x1/4" Pan Hd. Slt. Plast. Torx Screw	(2)
★ 50	14-20-0240	Remote Electronic Assembly	(1)
★ 51	06-65-0825	1/8 x 1/2 Groove Pin 5	(1)
52	28-14-1960	Gear Case	(1)
★ 53	14-38-0375	Motor Housing Assembly	(1)

FIG.	LUBRICATION
52	1-1/2 Oz. Type "E" Grease, No. 49-08-4121. Place Near Intermediate Shaft Ball Bearing In Gear Case.

FIG.	NOTES
1,48	Torque to 14-18 In./Lbs.
20,36,37	Torque to 15-20 In./Lbs.

MILWAUKEE ELECTRIC TOOL CORPORATION
13135 W. LISBON RD., BROOKFIELD, WI 53005