SERVICE PARTS LIST

BULLETIN NO.
55-42-8051

SPECIFY CATALOG NO. AND SERIAL NO. WHEN ORDERING PARTS				REVISED BULLETIN	DATE
1" - 1-5/8" SHARPFIRE				55-42-8050	Mar. 2003
CATALOG NO.	**6707-55**	STARTING SERIAL NO.	**A06B**	WIRING INSTRUCTION **58-03-1800**	

EXAMPLE:

00 | 0 Component Parts (Small #) Are Included When Ordering The Assembly (Large #).

NOTE: 6707-55 Includes Magazine Attachment No. 48-05-1000. See Reverse Side.

★ = **Part number change** from previous service parts list.

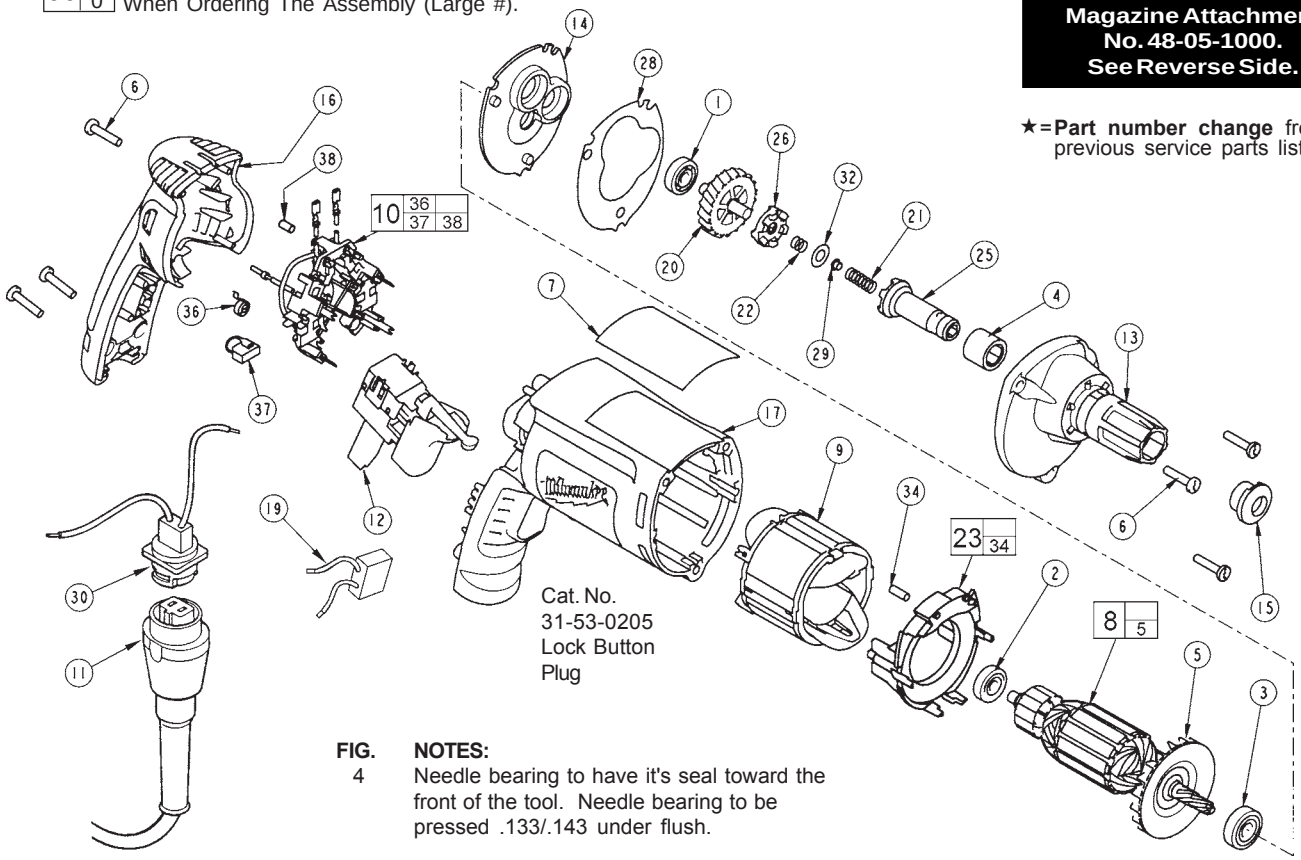

FIG. **NOTES:**

4 Needle bearing to have it's seal toward the front of the tool. Needle bearing to be pressed .133/.143 under flush.

FIG.	PART NO.	DESCRIPTION OF PART	NO. REQ.
1	02-04-0640	Ball Bearing	(1)
2	02-04-0645	Ball Bearing	(1)
3	02-04-0852	Ball Bearing	(1)
4	02-50-3245	Needle Bearing	(1)
5	22-84-0840	Fan	(1)
6	06-82-7275	7-18 x 3/4" Slotted Plastite Torx T-20	(6)
7	12-99-2735	Service Nameplate	(1)
★ 8	16-10-2201	Armature	(1)
9	18-07-2200	Field	(1)
10	22-18-1230	Brush Card Assembly	(1)
11	22-64-0676	Quik-Lok Cord Set	(1)
12	23-66-2585	Switch	(1)
13	28-14-2375	Gearcase	(1)
14	28-28-2315	Diaphragm	(1)
15	30-37-0046	Drywall Nose Guide	(1)
16	31-15-2030	Handle Halve	(1)
17	31-50-2030	Motor Housing	(1)
19	22-33-0550	Suppressor	(1)
★ 20	32-10-0521	Clutch Gear Assembly	(1)
21	40-50-0095	Separator Spring	(1)
22	40-50-8515	Bias Spring	(1)
23	42-14-0460	Baffle Assembly	(1)
25	42-66-0715	Clutch Chuck Assembly	(1)
26	42-70-0310	Drive Clutch	(1)
28	43-44-0985	Gasket	(1)
29	44-60-0505	Thrust Pin	(1)
30	22-56-1017	Blade Housing Assembly	(1)
32	45-88-0555	Clutch Thrust Washer	(1)
34	45-30-0030	Slug	(2)
36	23-52-1610	Brush Spring	(2)
37	22-18-1310	Brush Assembly	(2)
38	45-30-0035	Slug	(1)

FIG. **LUBRICATION:**

20,22 Place .02 oz. (.5 grams) of type "Y" grease, No 49-08-5270, on bias spring. Place .02 oz. (.5 grams) total of grease in the clutch pockets of clutch gear.

8,13 Place .27 oz. (7.6 grams) of type "Y" grease at the armature pinion location in the gearcase pocket and push down .20".

13,14 Apply a light film of type "Y" grease to needle and ball bearing pockets in diaphragm and gearcase prior to pressing bearings in.

21,32 Place .02 oz. (.5 grams) of type "Y" grease to clutch thrust washer, thrust pin and separator spring during assembly.

MILWAUKEE ELECTRIC TOOL CORPORATION
13135 W. LISBON RD., BROOKFIELD, WI 53005