SERVICE PARTS LIST

BULLETIN NO. 54-40-4146

SPECIFY CATALOG NO. AND SERIAL NO. WHEN ORDERING PARTS		REVISED BULLETIN	DATE
TWO SPEED DOUBLE INSULATED SAWZALL		54-40-4145	Jan. '85
CATALOG NO. 6512	STARTING SERIAL NO. 483-109350	WIRING INSTRUCTION	
		58-01-0245	

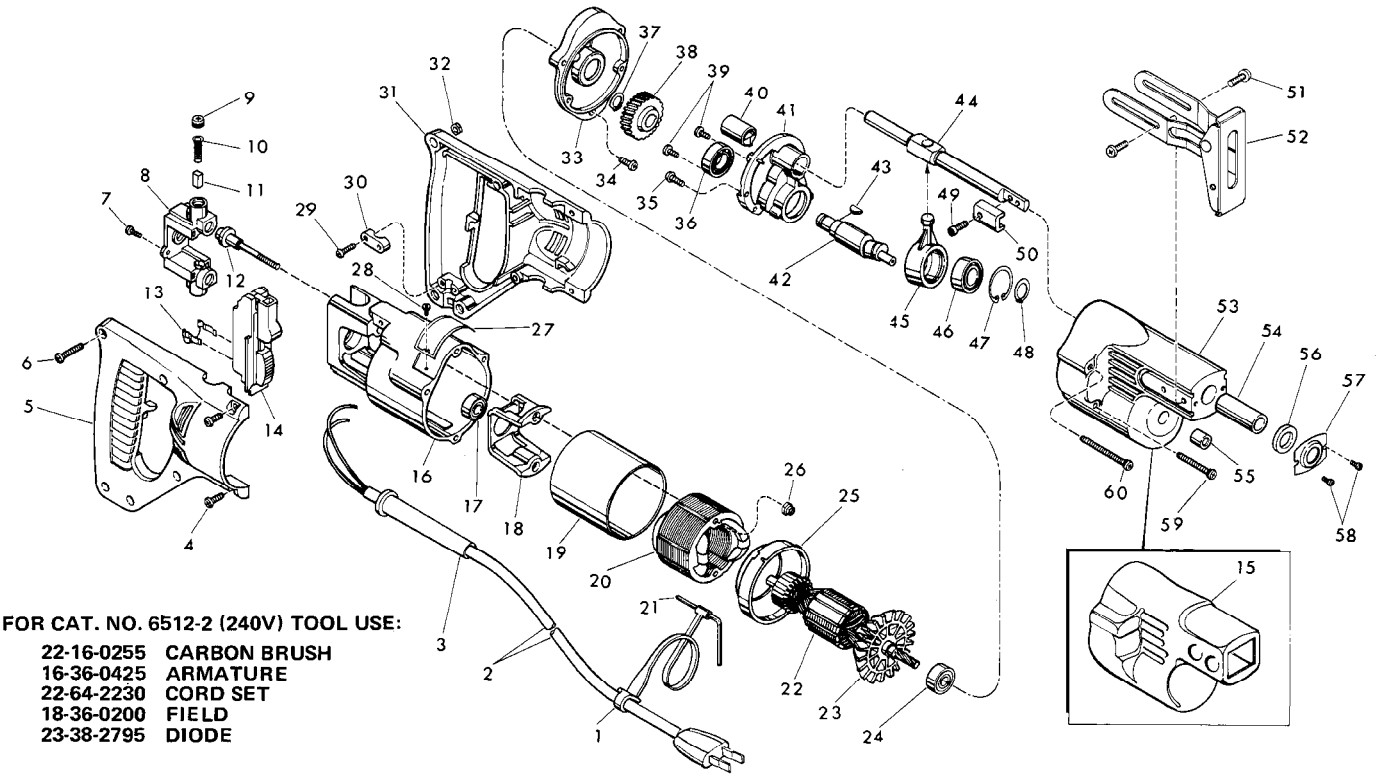

FOR CAT. NO. 6512-2 (240V) TOOL USE:

22-16-0255	CARBON BRUSH
16-36-0425	ARMATURE
22-64-2230	CORD SET
18-36-0200	FIELD
23-38-2795	DIODE

FIG.	PART NO.	DESCRIPTION OF PART	NO. REQ.
1	48-66-4080	Key Holder	(1)
2	22-64-0408	Cord Set	(1)
3	44-76-0150	Cord Protector	(1)
4	06-95-0700	8-32 x 1/2 Pan Hd. Taptite Screw	(4)
5	31-44-1300	R.H. Half - D Handle	(1)
6	06-81-0473	8-32 x 1 Pan Hd. Pozi Drive Screw	(5)
7	06-95-0075	6-32 x 3/8 Truss Hd. Taptite Screw	(2)
8	22-22-1330	Brush Holder Assembly	(1)
9	23-44-0190	Brush Retaining Cap	(2)
10	23-52-0160	Brush Spring	(2)
11	22-16-0275	Carbon Brush	(2)
12	06-81-1058	Insulated Field Bolt	(2)
13	23-38-2790	Diode	(1)
14	23-66-1040	Switch	(1)
15	45-12-0300	Gear Case Insulator	(1)
16	28-50-6201	Motor Housing	(1)
17	02-04-0845	Ball Bearing	(1)
18	31-55-0030	Coil Shield	(1)
19	23-16-0456	Field Insulator	(1)
20	18-30-0300	120V Field	(1)
21	49-96-0070	5/32" Socket Wrench	(1)
22	16-30-0425	120V Armature (Includes Fig. No. 23)	(1)
23	22-84-0530	Fan Assembly	(1)
24	02-04-0911	Ball Bearing	(1)
25	31-05-0050	Baffle	(1)
26	06-57-2975	8-32 Flexlock Hex Nut	(2)
27	12-99-0365	Nameplate Blank	(1)
28	06-85-0200	Nameplate Screw	(2)
29	06-95-0216	8-16 x 5/8 Plastite Screw	(2)
30	31-17-0155	Cord Clamp	(1)
31	31-44-1305	L.H. Half - D Handle	(1)
32	06-55-0835	8-32 Hex Nut	(5)
33	28-28-0345	Diaphragm	(1)
34	06-82-0015	8-32 x 5/8 Fil. Hd. Sem Screw	(1)
35	06-82-0020	8-32 x 1/2 Fil. Hd. Sem Screw (See Note)	(2)
36	02-04-1510	Ball Bearing	(1)
37	34-60-0920	Retaining Ring - External (See Note)	(1)
38	32-40-1920	Intermediate Gear	(1)
39	06-95-0075	6-32 x 3/8 Truss Hd. Taptite Screw	(2)
40	42-24-0250	Spindle Bearing - Rear	(1)
41	28-72-1002	Bearing Plate	(1)
42	36-92-0670	Wobble Shaft	(1)
43	06-42-1200	Woodruff Key	(1)
★ 44	38-50-5410	Reciprocating Spindle	(1)
45	30-72-0060	Wobble Plate	(1)
46	02-04-1510	Ball Bearing	(1)
47	34-80-2355	Retaining Ring - Internal (See Note)	(1)
48	34-60-1200	Retaining Ring - External (See Note)	(1)
49	06-75-2400	10-32 x 1/2 Skt. Hd. Screw	(1)
50	42-68-0073	Blade Clamp	(1)
★ 51	06-95-6270	10-24 x 1/2 Pan Hd. Taptite Sems	(4)
52	45-16-0495	Pivot Shoe Assembly	(1)
53	28-14-0575	Gear Case	(1)
54	42-24-0095	Spindle Bearing - Front (See Note)	(1)
55	02-50-1640	Needle Bearing	(1)
56	45-06-0300	Felt Seal	(1)
57	44-86-0370	Seal Retainer	(1)
58	06-95-0050	4-40 x 3/16 Pan Hd. Taptite Screw	(2)
59	06-95-5260	8-32 x 1-3/8 Fil. Hd. Sem. Screw	(2)
60	06-95-5270	8-32 x 1-7/8 Fil. Hd. Sem. Screw	(2)

FIG. NOTES

35 Apply Type 242 Blue Loctite
37, 47, 48 – Burr Side Out
40 V-Notch Press In From Diaphragm Side
54 Press to 1/32" Below Surface

LUBRICATION

2-1/2 Oz. Type "B" Lubricant - Gear Case
1/2 Oz. Type "A" Lubricant - Bearing Plate/Intermediate Gear

MILWAUKEE ELECTRIC TOOL CORPORATION
13135 W. LISBON RD., BROOKFIELD, WIS. 53005