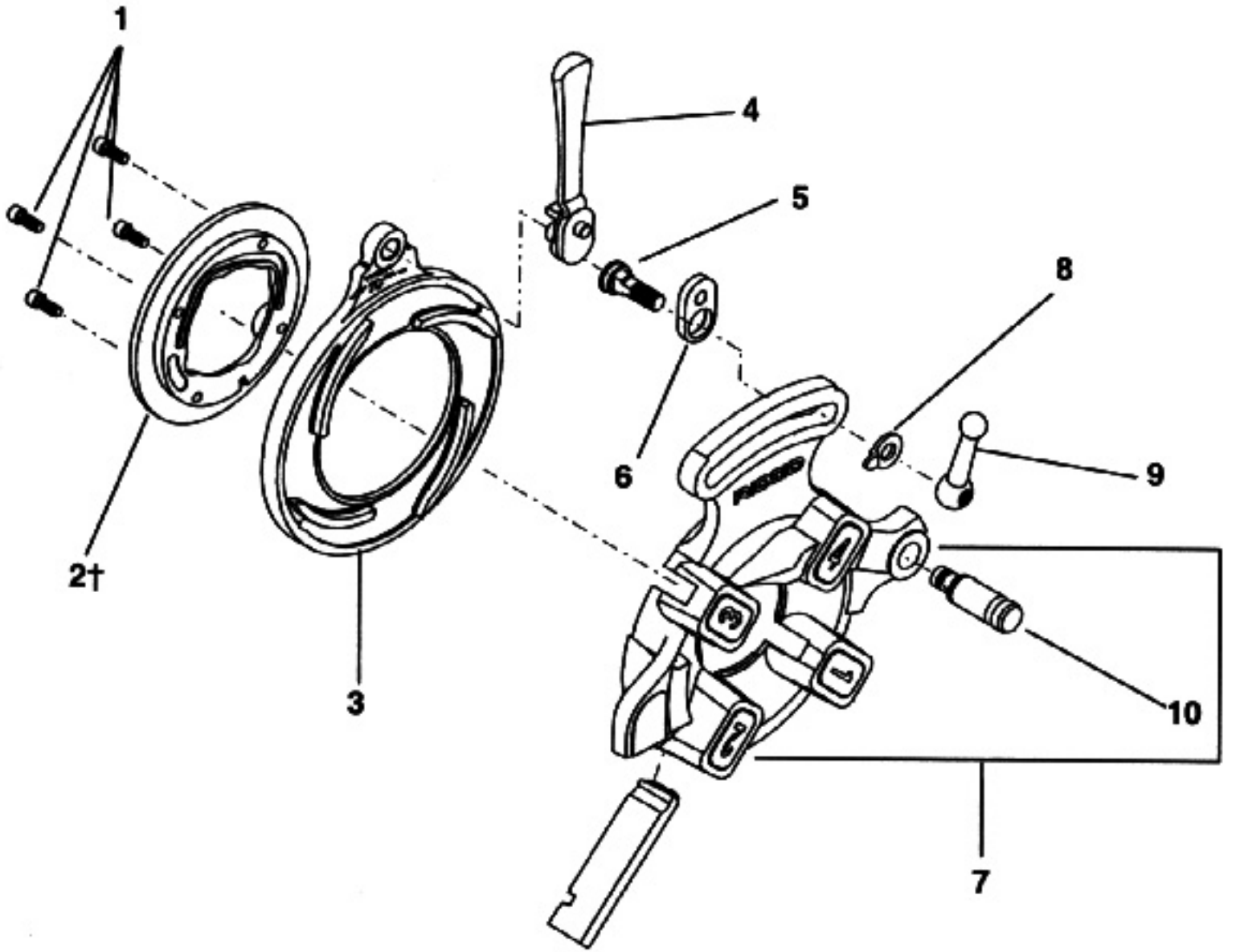
1
4
5
8
6
9
2†
3
10
7