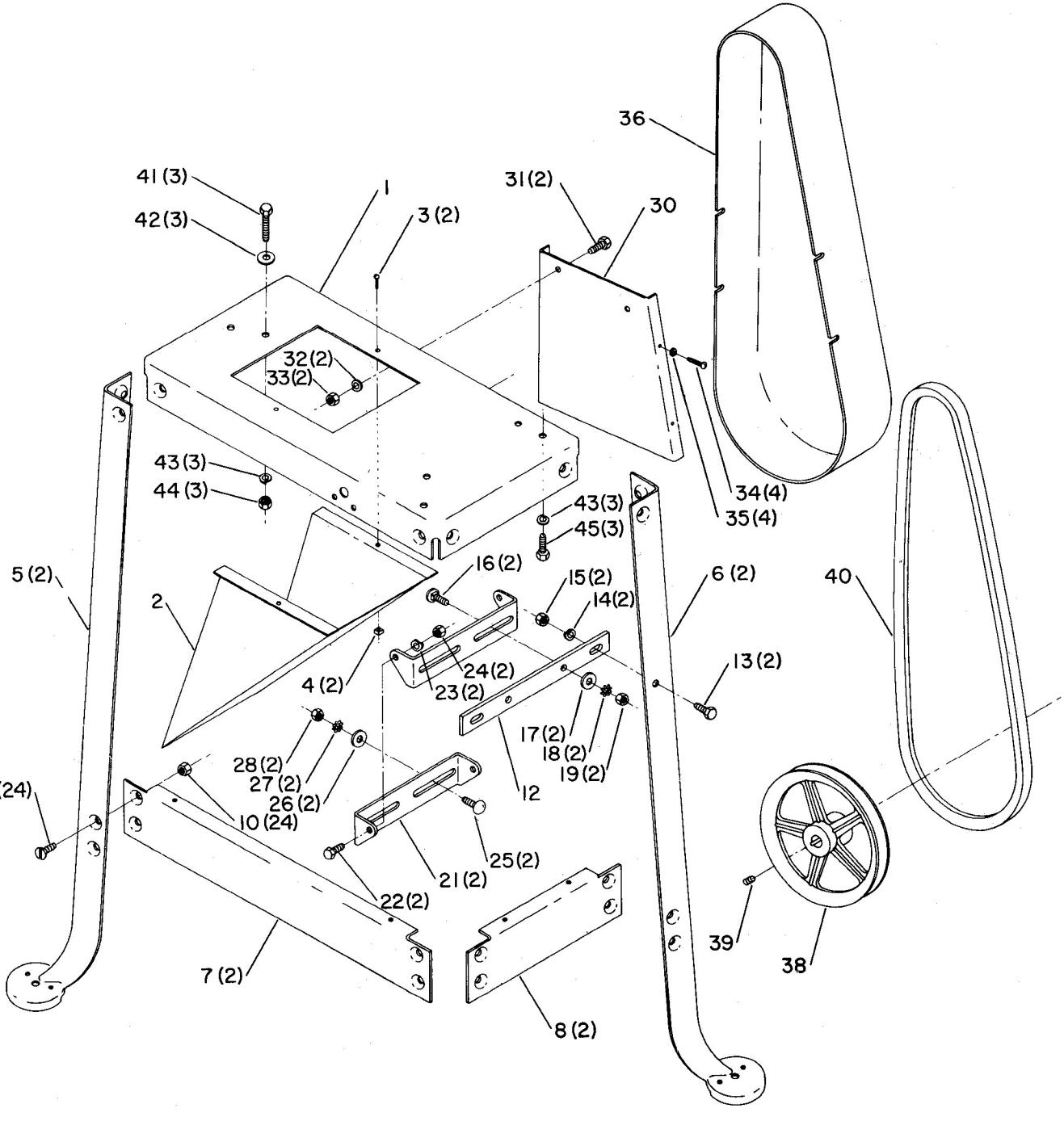50-290 STEEL STAND FOR 4" and 6" JOINTERS