DELTA

46-140
11" WOOD LATHE

WL-2B

425-99-651-5008
Revised 5-10-85

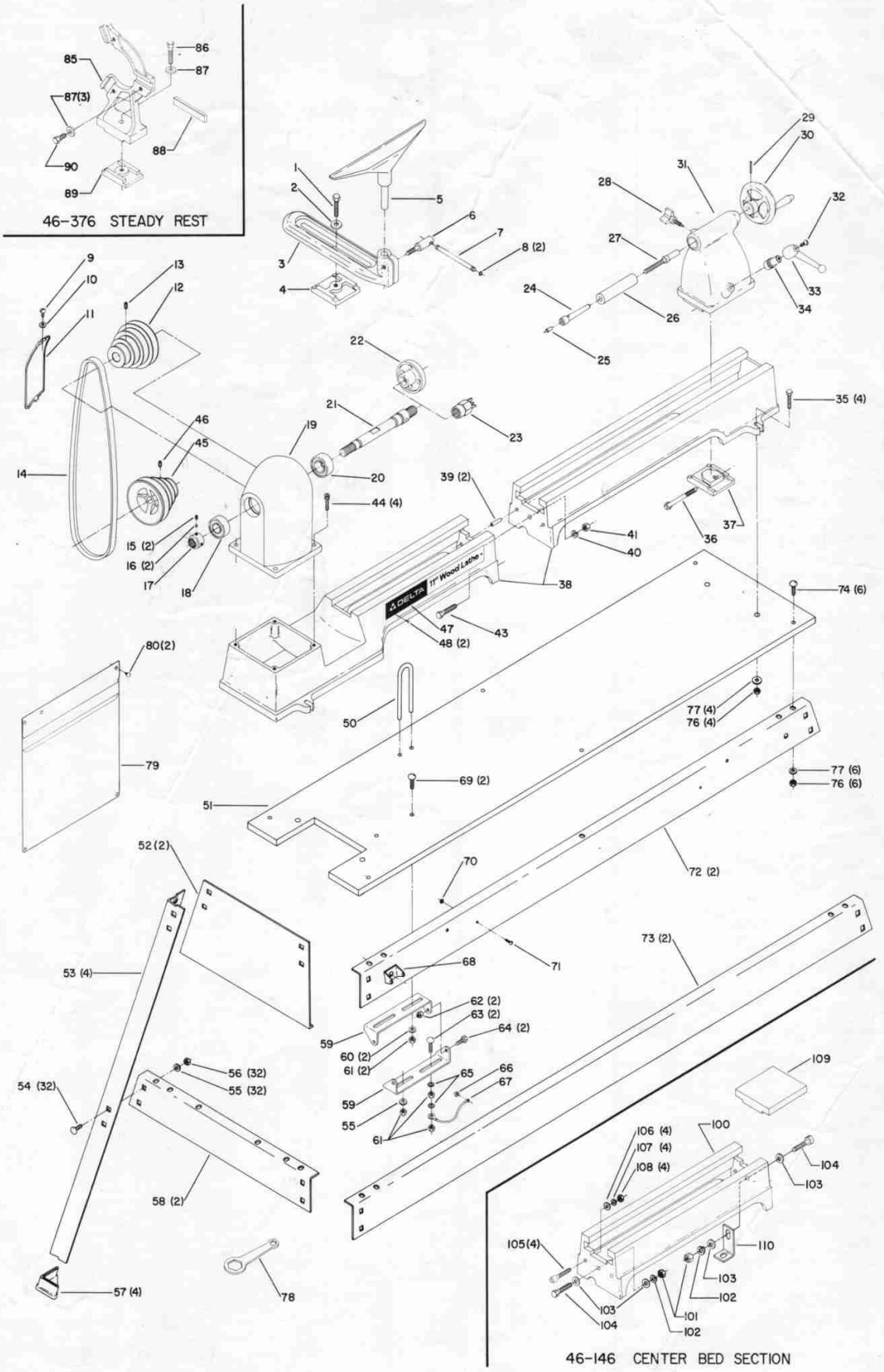

REPLACEMENT PARTS

REF. NO.	PART. NO	DESCRIPTION
1	901-01-060-0617	3/8-16 x 1 1/2" Hex Hd Cap Screw
2	1230675	Special Washer
3	425-99-005-0001	Tool Rest Base
4	425-99-027-0002	Clamp, Tool Rest
5	425-99-355-0001	10" Tool Rest
6	425-99-111-0001	Tool Rest Handle Stud
7	425-99-067-0001	Lever
8	1231108	O-Ring
9	901-02-120-7528	1/4-20 x 1/2" Truss Hd Screw
10	904-01-010-1614	1/4" Flat Washer
11	425-99-054-0003	Guard
*	425-99-358-0004	Headstock Assy., Const. of:
12	1231220	Headstock Pulley, Incl.:
13	901-04-150-0217	5/16-18 x 1/2" Hex Soc Set Screw
14	49-154	V-Belt (40-1/8" O.C.)
15	901-04-150-0208	1/4-20 x 1/4" Hex Soc set Screw
16	402-04-063-5001	Nylon Plug
17	425-99-079-0001	Spindle Retainer
18	920-04-020-5359	Headstock Front Bearing
19	425-99-058-0003	Headstock
20	920-04-020-5360	Headstock Rear Bearing
21	425-99-085-0004	Spindle
22	46-091	3" Faceplate
23	46-083	Spur Center
*	425-99-392-0003	Tailstock Assy., Const. of:
24	46-086	Dead Center w/#1 MT, Incl.:
25	425-99-022-0001	Center
26	425-99-085-0006	Spindle
27	425-99-112-0004	Screw
28	1231549	Knob
29	905-01-010-2732	5/32 x 1" Roll Pin
30	1231551	Handwheel Assembly
31	425-99-092-0002	Tailstock
32	901-02-120-7528	1/4-20 x 1/2" Truss Hd Screw
33	931-04-010-3635	Handle
34	902-08-041-3065	Serrated Nut
35	901-01-060-0609	5/16-18 x 1 1/2" Hex Hd Cap Screw
36	901-01-060-3113	3/8-16 x 4" Hex Hd Cap Screw
37	425-99-027-0003	Clamp, Tailstock
38	425-99-306-0002	Bed Assembly, Incl.:
39	905-01-012-0325	5/16 x 15/16" Roll Pin
40	904-02-010-1716	7/16" Lockwasher
41	902-01-010-5437	7/16-14 Hex Nut
43	901-01-060-3080	7/16-14 x 1 1/2" Hex Hd Cap Screw
44	901-03-010-0750	5/16-18 x 1" Hex Soc Set screw
45	41-701	Motor Pulley, Incl.:
46	901-04-150-6202	5/16-18 x 3/8" Hex Soc Set Screw
47	425-99-137-0006	Nameplate
48	901-06-450-2250	#4 x 3/16" Drive Screw
50	425-99-089-0001	Support
51	427-99-115-0106	Top Shelf
52	427-99-123-0003	Panel
53	427-99-066-0034	Leg
54	901-11-020-0834	5/16-18 x 3/4" Carriage Bolt
55	904-01-010-1620	5/16" Flat Washer
56	902-01-010-1300	5/16-18 Hex Nut
57	427-99-048-0001	Foot
58	427-99-014-0031	Bracket (17-1/4")
59	1087211	Motor Bracket
60	904-01-010-1605	5/16" Flat Washer
61	904-01-010-1300	5/16-18 Hex Nut
62	1231160	5/16-18 Hex Lock Nut
63	901-11-020-0808	5/16-18 x 1" Carriage Bolt
64	901-01-060-0606	5/16-18 x 5/8" Hex Hd Cap Screw
65	904-03-030-1656	5/16" Ext Tooth Lockwasher
66	902-01-120-1216	#10-24 Hex Nut
67	1231555	Ground Wire Assembly
68	424-01-014-0002	Switch Guard
69	901-11-020-0808	5/16-18 x 1" Carriage Bolt
70	904-03-030-1795	#10 Ext Tooth Lockwasher
71	901-02-010-0525	#10-24 x 1/2" Rd Hd Mach Screw
72	427-99-014-0018	Bracket (47 1/2")
73	427-99-014-0017	Bracket (53 5/8")
74	901-11-020-0808	5/16-18 x 1" Carriage Bolt
75	904-01-010-1605	5/16" Flat Washer
76	902-01-010-1300	5/16-18 Hex Nut
77	904-01-010-1620	5/16" Flat Washer
78	1230627	Wrench
79	400-06-603-0001	Envelope
80	400-06-079-0001	Retainer

NOT INCLUDED WITH BASIC MACHINE

REF. NO.	PART. NO	DESCRIPTION
85	46-376	Steady Rest, Including:
86	901-01-060-0617	3/8-16 x 1 1/2" Hex Hd Cap Screw
87	904-10-031-2093	Special Washer
88	425-99-004-0001	Bar
89	425-99-027-0005	Base Clamp
90	901-01-060-0640	3/8-16 x 3/4" Hex Hd Cap Screw
100	46-146	Center Bed Section, Incl.:
101	902-01-010-5900	3/8-16 Hex Nut
102	904-02-010-1704	3/8" Lockwasher
103	904-01-010-1615	3/8" Flat Washer
104	901-01-060-0617	3/8-16 x 1 1/2" Hex Hd Cap Screw
105	901-03-010-0779	5/16-18 x 1 1/2" Soc Hd Cap Screw
106	904-01-010-1620	5/16" Flat Washer
107	904-02-010-1703	5/16" Lockwasher
108	902-01-010-1300	5/16-18 Hex Nut
109	425-99-010-0001	Alignment Gage
110	425-99-014-0001	Support Bracket
*	46-100	Shelf Extension, Consisting of:
121	427-99-115-0109	Shelf
122	901-11-020-0808	5/16-18 x 1" Carriage Bolt
123	427-99-014-0047	Bracket
124	904-01-010-1620	5/16" Flat Washer
125	902-01-010-1300	5/16-18 Hex Nut
126	901-11-020-0834	5/16-18 x 3/4" Carriage Bolt
127	427-99-014-0045	Rear Bracket
128	427-99-014-0046	Front Bracket

* NOT SHOWN ASSEMBLED

1390G

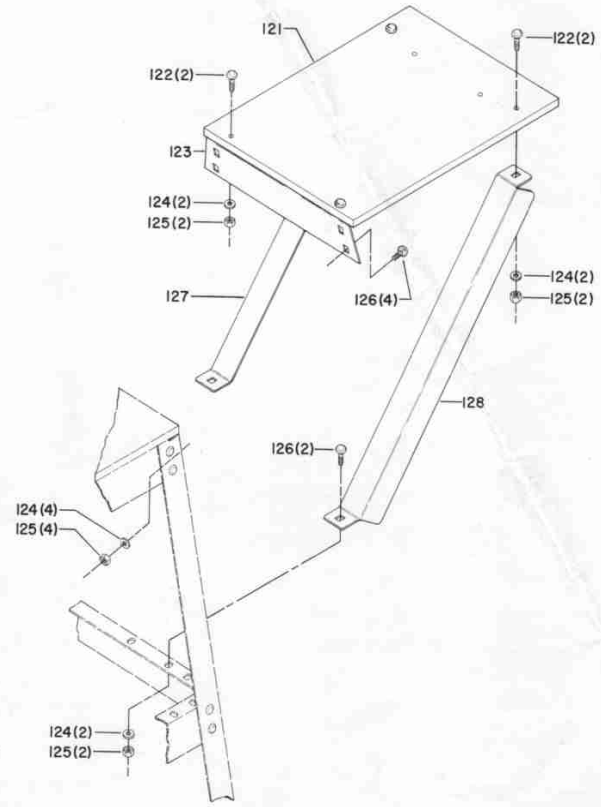

46-100 SHELF EXTENSION