ELECTRONIC JIG SAW

Model 4303C

IMPORTANT — To assure product SAFETY and RELIABILITY, repairs, maintenance or adjustments should be performed by MAKITA Service Centers or other qualified service organizations. Always use MAKITA replacement parts.

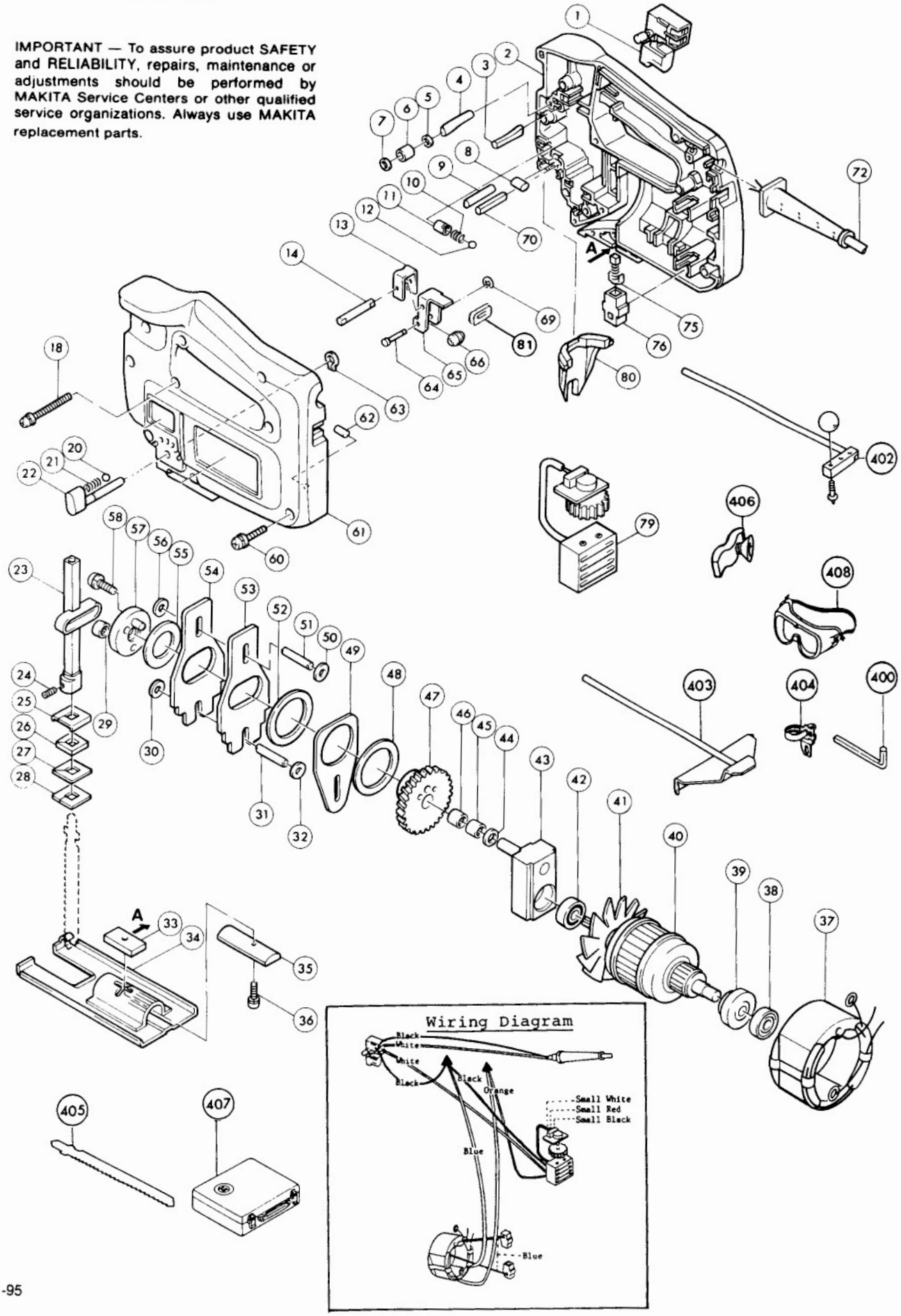

Fig.	Part No.	Qty. Used	Description
1	651216-6	1	SWITCH
2	182005-3A	1	HOUSING SET (Incl. Fig. 61 & 62)
3	256171-3	1	PIN 5
4	256169-0	1	PIN 5
5	267034-8	1	FLAT WASHER
6	321988-4	1	ROLLER
7	267034-8	1	FLAT WASHER 5
8	256172-1	4	PIN 6
9	256171-3	1	PIN 5
10	231429-1	1	COMPRESSION SPRING 4
11	322105-9	1	SPRING GUIDE
12	216011-7	1	STEEL BALL 5.6
13	343424-0	1	SPACER
14	256167-4	1	PIN 4
18	911268-2	3	P.H. SCREW M5x45
20	216008-6	1	STEEL BALL 4
21	231314-8	1	COMPRESSION SPRING 4
22	272220-8	1	LEVER 25
23	168182-5	1	SLIDER
24	265894-2	1	H.S.H. BOLT M6x8
25	343408-8	1	DUST PLATE
26	421318-0	1	DUST SEAL
27	253340-7	1	THIN WASHER 9
28	261080-3	1	FIBER WASHER 9
29	212010-7	1	NEEDLE BEARING 607
30	253804-1	1	FLAT WASHER 6
31	256170-5	1	PIN 6
32	253804-1	1	FLAT WASHER 6
33	343377-3	1	BASE HOLDER
34	164829-9	1	BASE
35	315953-3	1	CLAMP PLATE
36	922126-7	1	H.S.H. BOLT M4x16
37	622646-8	1	FIELD ASS'Y 115V (Incl. 2 ea. Insulated Terminal FV1.25-M4, 654038-3)
38	211033-2	1	BALL BEARING 608LB
39	681627-1	1	INSULATION WASHER
40	612906-6	1	ARMATURE ASS'Y 115V (Incl. Fig. 38-42)
41	241044-3	1	FAN 68
42	211033-2	1	BALL BEARING 608LB
43	152304-7	1	BEARING CASE (Incl. Pin 8-11, 256424-0)
44	253165-9	1	FLAT WASHER 8
45	212005-0	1	NEEDLE BEARING 810
46	212005-0	1	NEEDLE BEARING 810
47	221752-2	1	HELICAL GEAR 65
48	253880-5	1	FLAT WASHER 35
49	343379-9	1	PUSH PLATE
50	253804-1	1	FLAT WASHER 6
51	256170-5	1	PIN 6
52	253880-5	1	FLAT WASHER 35
53	343380-4	1	BALANCE PLATE
54	343380-4	1	BALANCE PLATE
55	253122-7	1	FLAT WASHER 26
56	253804-1	1	FLAT WASHER 6
57	152243-1	1	CRANK COMPLETE (Incl. Pin 6-7, 256405-4)
58	911221-8	2	P.H. SCREW M5x16
60	911243-8	6	P.H. SCREW M5x25
61	182005-3A	1	HOUSING SET (Incl. Fig. 2 & 62)
62	263002-9	3	RUBBER PIN 4
63	961002-0	1	RETAINING RING S-6
64	256640-4	1	PIN 4
65	343378-1	1	RETAINER
66	321989-2	1	ROLLER
69	961017-7	1	STOP RING E-3
70	256171-3	1	PIN 5
72	664422-4	1	CORD
75	191904-8	1	CARBON BRUSH SET CB-113
76	643605-9	2	BRUSH HOLDER
79	631079-6	1	CONTROLLER
80	414131-3	1	PROTECTOR
81	421353-8	1	DUST SEAL

ACCESSORIES

Fig.	Part No.	Qty. Used	Description
400	783201-2	1	HEX. WRENCH 3
402	123030-5	1	CIRCULAR GUIDE ASS'Y (Incl.1 ea Knob 20, 271601-3; & Circular Guide Pin, 323223-6)
403	164113-2	1	GUIDE RULE
404	410048-8	1	WRENCH HOLDER 3.4
405	792428-3	1	JIG SAW BLADE #51
	792429-1	1	JIG SAW BLADE #58
	792430-6	1	JIG SAW BLADE #59
406	343381-2	1	RULE HOLDER ASS'Y (Incl. H.S.H. Bolt M5x10, 251951-2)
407	181967-2	1	STEEL TOOL CASE
408	191686-2	1	SAFETY GOGGLES