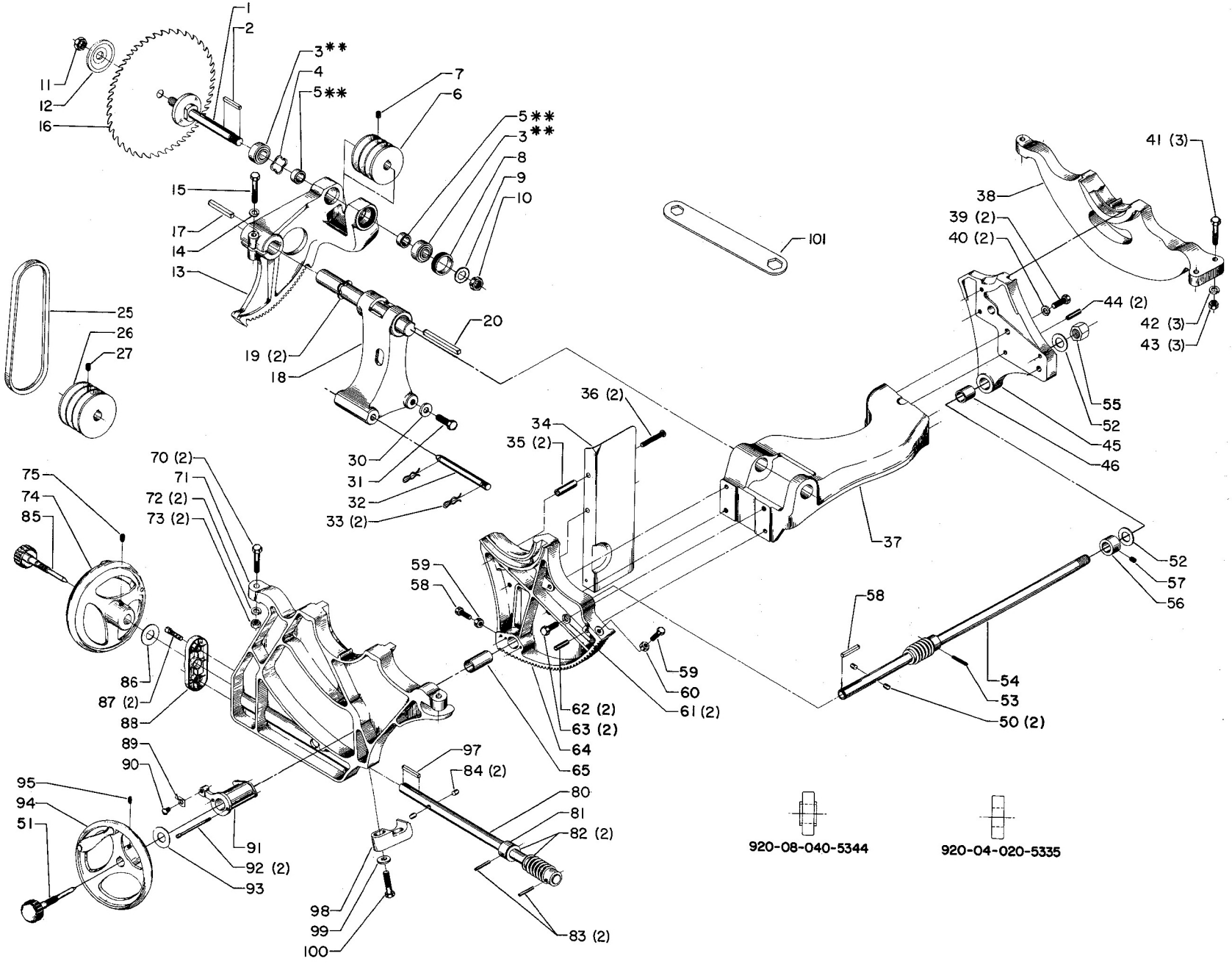
1
2
3**
4
5**
7
6
5**
3**
8
9
10
11
12
16
15
17
14
13
25
26
27
19 (2)
18
20
101
41 (3)
38
39 (2)
40 (2)
44 (2)
42 (3)
43 (3)
55
52
45
46
36 (2)
34
35 (2)
30
31
32
33 (2)
37
70 (2)
71
72 (2)
73 (2)
75
74
85
59
58
52
57
56
58
86
87 (2)
88
59
60
61 (2)
62 (2)
63 (2)
64
65
54
53
50 (2)
89
90
97
84 (2)
95
94
51
91
92 (2)
93
80
81
82 (2)
98
99
100
83 (2)
920-08-040-5344
920-04-020-5335

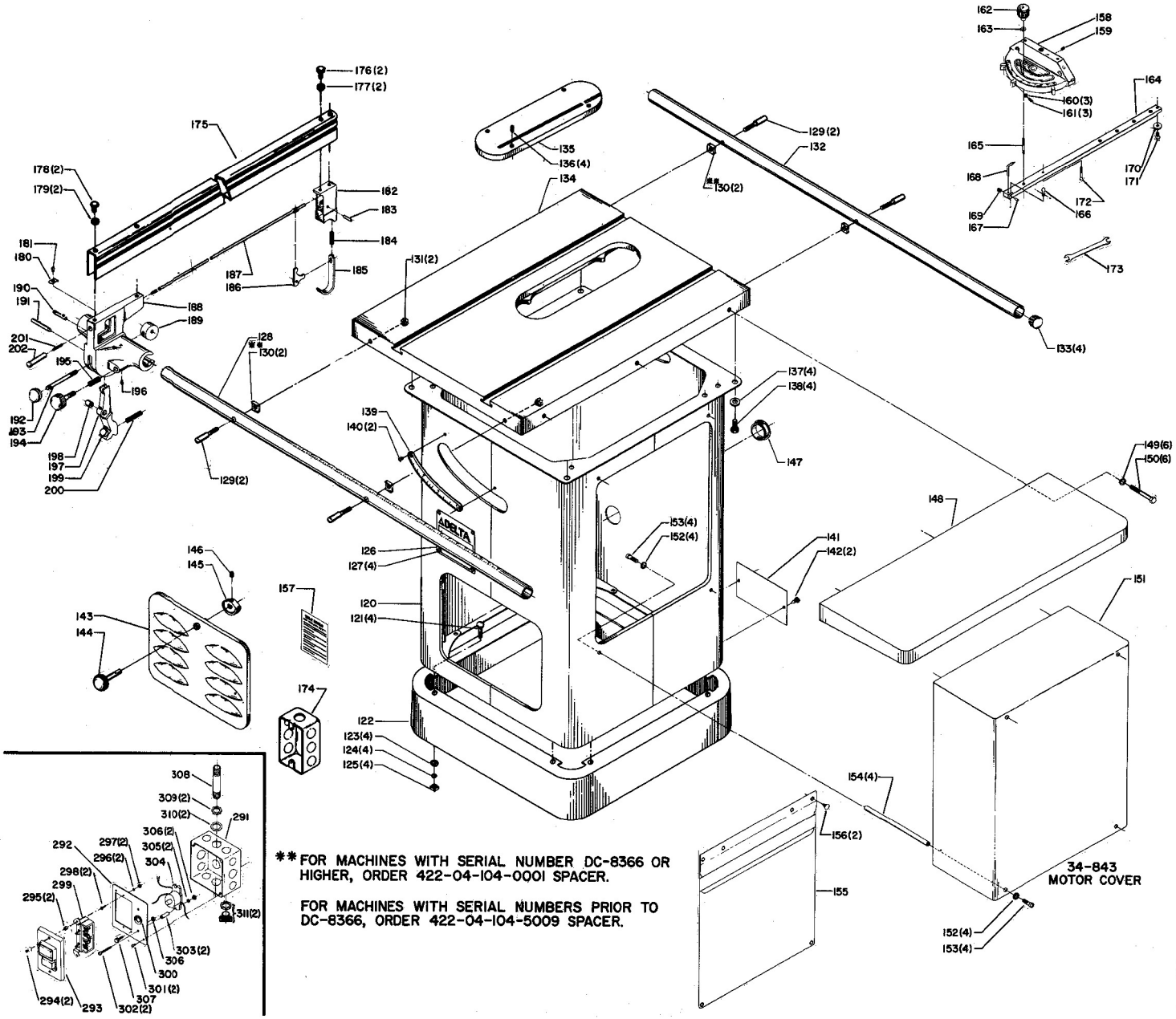

**FOR MACHINES WITH SERIAL NUMBER DC-8366 OR HIGHER, ORDER 422-04-104-0001 SPACER.

FOR MACHINES WITH SERIAL NUMBERS PRIOR TO DC-8366, ORDER 422-04-104-5009 SPACER.

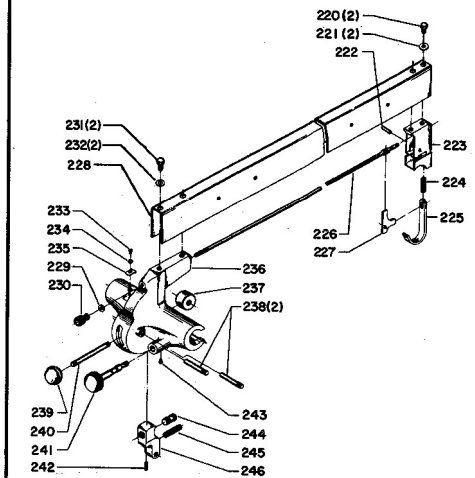

OLD STYLE RIP FENCE ASS'Y. 422-04-355-0001

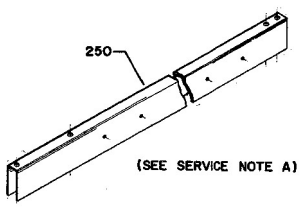

OLD STYLE STEEL RIP FENCE ASS'Y.
422-04-312-5007

NOTE: COMPONENTS NOT SHOWN ARE SAME AS CURRENT FENCE ASS'Y.

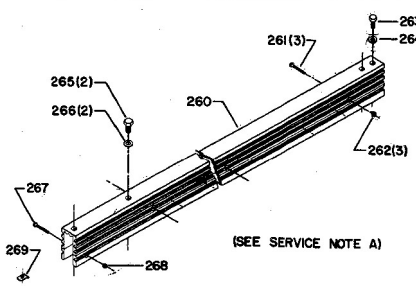

OLD STYLE TWO PIECE
ALUMINUM RIP FENCE ASS'Y.
EARLY 34-896

NOTE: COMPONENTS NOT SHOWN ARE SAME AS CURRENT FENCE ASS'Y.