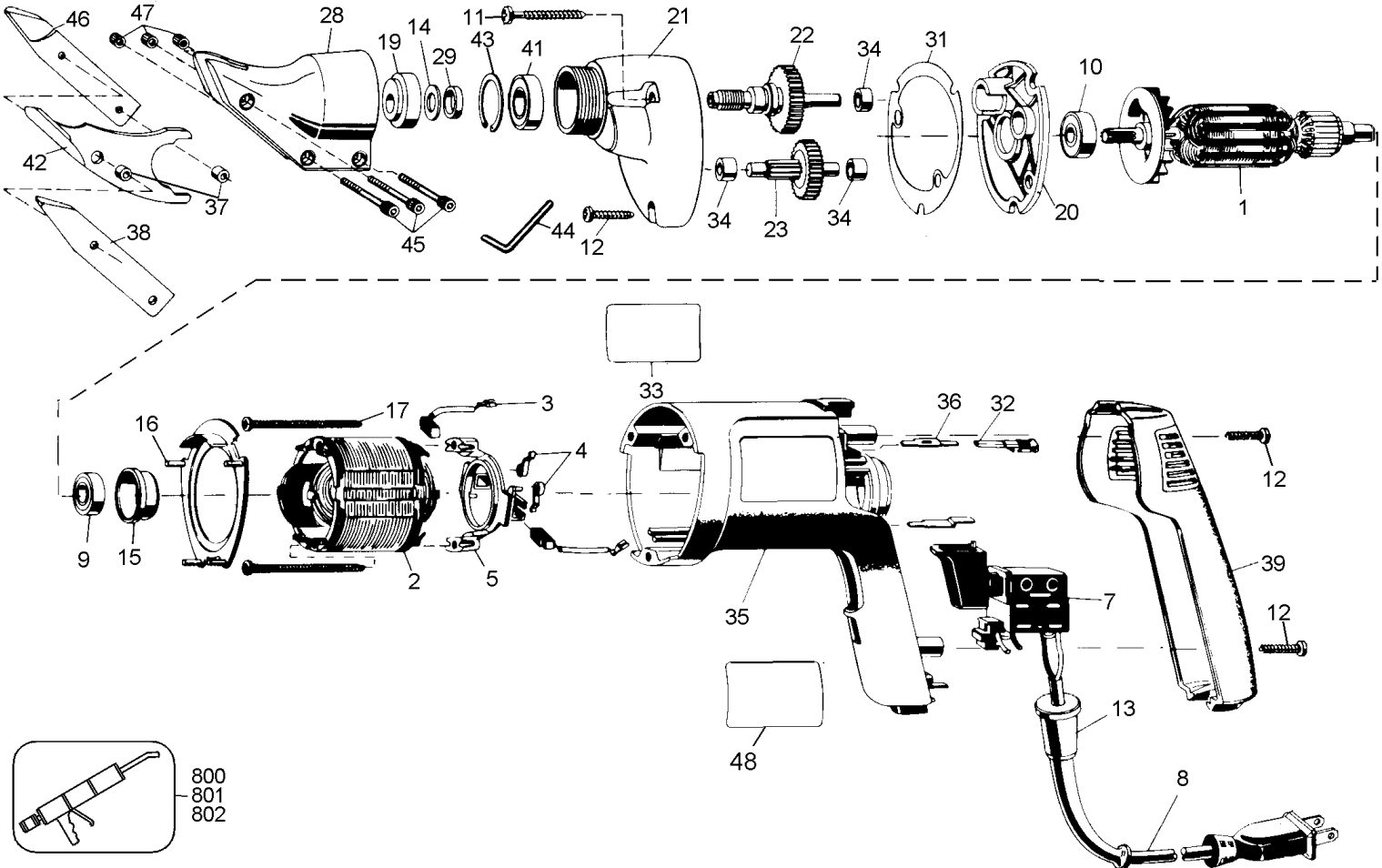
46
47
28
19
14
29
11
43
41
21
22
34
31
10
42
37
38
45
44
12
34
23
34
20
1
33
17
3
16
4
36
32
12
9
15
2
5
39
7
35
12
13
48
800
801
802
8

Parts List for 3207 Type 100

Item Number	Part Number	Description	Qty Required
1	000000-00	No Longer Available	1
2	000000-00	No Longer Available	1
3	445861-01	BRUSH & LEAD	2
4	445860-00	SPRING,BRUSH	2
5	449899-05	RING,BRUSH	1
7	286250-00	SWITCH,VS,AC	1
8	330072-98	CORD/8FT/18-2SJ	1
9	330003-04	BEARING,BALL	1
10	330003-04	BEARING,BALL	2
11	330019-16	SCREW	2
12	330019-13	SCREW,M4X19	3
13	330005-01	PROTECTOR,CORD	1
14	091975-00	WASHER	1
15	445217-02	SLEEVE	1
16	447866-00	BAFFLE,FAN	1
17	448269-00	SCREW	2
19	448393-01	ECCENTRIC	1
20	448658-02SV	COVER-GEAR CASE	1
21	132697-03SV	CASE- GEAR	1
22	445352-00SV	GEAR & SPINDLE	1
23	448069-09SV	GEAR	1
28	91971-00	HOUSING	1
29	132809-00	SPACER	1
31	386422-00	GASKET	1
32	449192-00	TERMINAL	2
33	000000-00	No Longer Available	1
34	131557-00	BEARING,SLEEVE	3

Parts List for 3207 Type 100

Item Number	Part Number	Description	Qty Required
35	464231-00	CASE,FIELD	1
35	000000-00	No Longer Available	1
36	445881-99	STRIP,CONTACT	2
37	91968-00	SPACER	2
38	91969-00	LEFT KNIFE	1
39	450594-03	COVER,HANDLE	1
41	330003-09	BEARING,BALL	1
42	91970-00	BLADE	1
43	087692-00	RET RING	1
44	099056-06	WRENCH	1
45	679889-00	SCREW,SPECIAL	3
46	91967-00	RIGHT KNIFE	1
47	91966-00	INSERT	3
48	152176-00	LABEL,ID	1
800	761995-01	GREASE, 6 OZ.	1
801	283484-01	GREASE,32 OZ.	1
802	284778-00	GREASE,MOLYKOTE	1