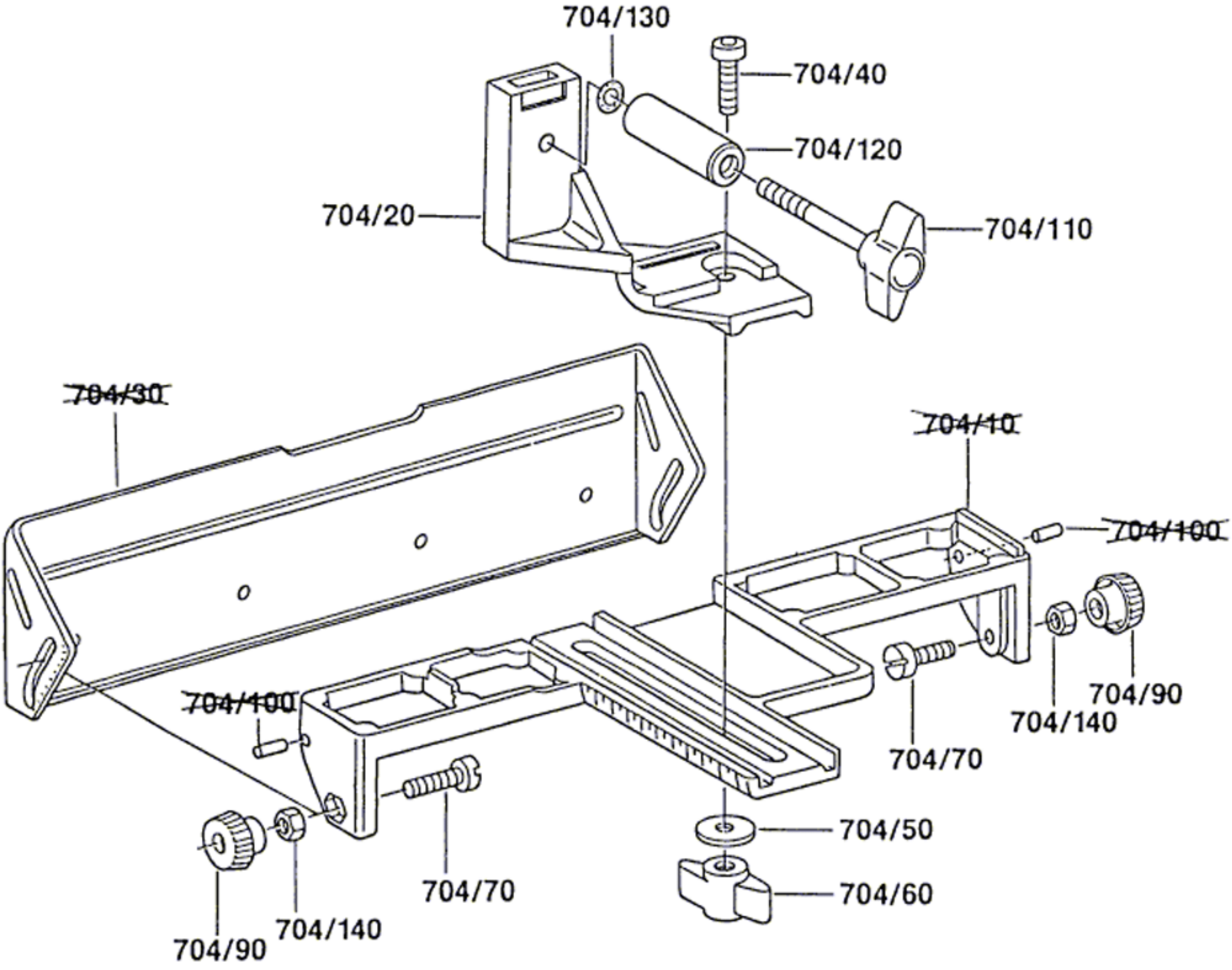
704/130
704/40
704/120
704/20
704/110
704/30
704/10
704/100
704/100
704/90
704/140
704/70
704/50
704/60
704/70
704/140
704/90