Pn-Screwdriver - Ind.

180 WATT-SERIE | 0 607 453 010

Table of Content

Spare parts list..... 2

Illustration - Type..... 5

Subject to technical alterations. No liability is accepted for printing errors |7 September 2023

Robert Bosch Power Tools GmbH
Max-Lang-Strasse 40-46
DE-70771 Leinfelden-Echterdingen
https://www.boschtoolservice.com

Illustration - Type - E

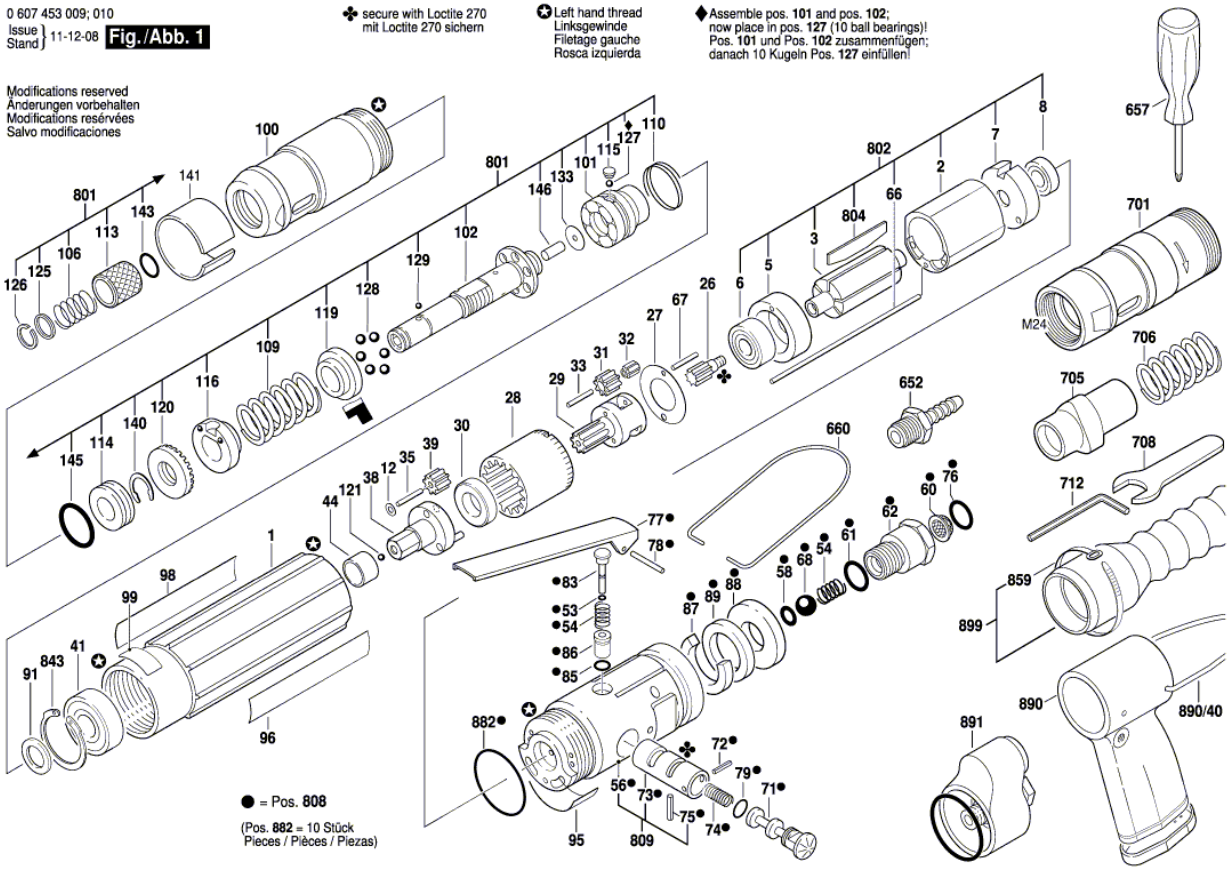

Robert Bosch Power Tools GmbH
Max-Lang-Strasse 40-46
DE-70771 Leinfelden-Echterdingen
https://www.boschtoolservice.com